N O T I C E T O C O N T R A C T O R S

Notice is hereby given that sealed proposals for constructing Commerce Rail Yard Parking Lot & Two-way conversion of St. Francis will be received at the Office of the Purchasing Manager, City Hall, 455 North Main, Wichita, Kansas until 10:00 o'clock A. M. on **September 16, 2016**, at which time the bids will be opened publicly and read aloud and tabulated by the Board of Bids and Contracts for consideration by the City Council. Bids received after said time will be returned unopened.

NOTE: BIDDER SHALL AFFIX THE FOLLOWING PROJECT NUMBER TO THE BID ENVELOPE **210494**

ATTENTION ALL BIDDERS: A BID BOND IN THE AMOUNT OF FIVE PERCENT (5%) OF THE TOTAL BID OR AN ANNUAL BID BOND IS REQUIRED PRIOR TO BID OPENING. SEE SECTION 102.3 OF THE CITY OF WICHITA STANDARD SPECIFICATIONS FOR FURTHER INFORMATION.

BIDDERS ARE ADVISED TO CONTACT THE OFFICE OF THE CITY ENGINEER (316-268-4501) SHOULD THEY HAVE ANY QUESTIONS OR CONCERNS ABOUT THE PLANS, SPECIAL OR SUPPLEMENTAL PROVISIONS, MINORITY STATUS, OR THE PROPER PREPARATION OF THE BID DOCUMENT.

THE BID FORM SHALL BE PREPARED USING UNIT PRICES PER BID ITEM, UNLESS OTHERWISE NOTED.

SPECIAL PROVISION TO CITY OF WICHITA, KANSAS
STANDARD SPECIFICATIONS

Commerce RailYard Parking Lot & Two-way conversion of St. Francis
472-84935 707029 210494

The City of Wichita's Standard Specifications are required provisions for the furnishing of all materials and doing all work to complete the above referenced project, and are hereby made a part of these provisions as if fully set forth herein. Said Standard Specifications shall control except as modified by the following Special Provisions. The Standard Specifications are on file in the City Engineer's Office, available for purchase from QuikPrint for the construction of City projects, or can be found online at http://www.wichita.gov/Government/Departments/PWU/Pages/Regulations.aspx ****Plan sheets for this project are available on the City website, however, blueline copies can be picked up at QuikPrint, 217 Pennsylvania, Wichita KS, telephone (316) 942-2208 after September 7, 2016.**** The following **Special Provisions** shall be applicable to this project:

The Contractor shall read and fully comprehend every aspect of the contract provisions included in this bid proposal, prior to submitting a bid for the project. Any questions prior to bid submittal should be directed to Paul Gunzelman, P.E. Project Engineer, at (316) 268-4393 or pgunzelman@wichita.gov.

THIS **IS NOT** A STATE/FEDERAL AID CONTRACT.

PROJECT SPECIFIC

1. **Pre-Bid Conference**. **Monday, September 12, 2016, at 10:00 a.m**., Engineering Conference Room, Central Maintenance Facility, 1801 S. McLean, Wichita Kansas.

2. **Start Date**. The work order on this project shall be issued **at the Contractor's request contingent upon the City of Wichita having an executed contract and at Engineer's approval.** Conflicts with utilities shall not have an effect on the completion date.

3. **Public Information Meeting**. Contractor will be required to schedule a 'Public Information' meeting at least 7 days in advance of construction. Contractor will provide a minimum three-day notice of said meeting's time and location to adjacent residents, property owners and businesses. The Contractor will moderate the meeting and discuss issues such as construction schedules, phasing, traffic control, access to properties and any special considerations regarding the construction and phasing of the project. Key Contractor and City personnel should be in attendance.

4. **Working Days/Completion Date.** All work on the project except for placement of artistic elements shall be completed by **December 5, 2016**. The artistic elements shall be completed by **March 1, 2017**. Working days will be charged as provided for in the Standard Specifications, once the work order is issued. **The non-availability of material shall not prevent working days from being assessed.**

   For calendar-day completion projects, the Contractor is required to work a minimum of six days per week excluding official city holidays. Work, which will require inspection by the Engineer, shall not be permitted on Sundays.

5. **Basis of Payment**. Payment for the bid items will be as a **lump sum/measured quantity** amount based on the bid quantities and unit prices in the bid proposal.

6. **Artist Set Fees and Payment Schedule.** See attached document.

7. **Artist Rendering.** A rendering labeling various art features is attached.

8. **Artist Contact.** Kent Williams is the Artist Consultant. His contact information is (323) 251-5784 or kent.t.williams@gmail.com

9. **Approved Materials List.** A list of materials approved for use on City of Wichita construction projects can be found on the City website at http://www.wichita.gov/Government/Departments/PWU/Pages/Regulations.aspx. All approved materials shall conform to the appropriate requirements set forth in the Standard Specifications, and shall have been previously approved by the Material Review Board (MRB). Information on obtaining approval for new materials through the MRB is available on the website.

10. **Existing Conditions Documentation.** Contractor shall document existing property conditions prior to construction. Documentation shall be video-recorded tape supplemented with 35 mm or digital photographs. Neither videotape nor photographs shall be made from a moving vehicle. **One (1) copy of the documentation package shall be provided to the Engineer prior to beginning construction on the project.**

11. **Revised 052914 (gj)**
Pipe Backfill. All box culvert, storm sewer, duct bank, waterline and sanitary sewer excavation under proposed pavement shall be sand filled and flushed (jetted and vibrated) per City Standard Specifications (section 801), unless flowable fill or other improved backfill material is otherwise specified. The sand fill shall start at the top of improved bedding and be brought up uniformly to an elevation 12 inches above the top of pipe, or 2 feet below the bottom of proposed pavement, whichever is higher. However, in no instance shall the sand fill be brought up to less than 6 inches below the pavement subbase material. Storm sewer adjacent to the back of curb and sanitary sewer in front and side lots shall also be sand filled per this provision, to within 2 feet of final grade. All costs for sand filling and flushing shall be included in the unit price bid for "Fill, Sand (Flushed & Vibrated)". This item shall be paid for at the unit price bid per linear foot of trench filled, regardless of trench depth and/or pipe size, unless indicated otherwise by the plans or contract.

12. **Pavement Markings**. Unless otherwise indicated on the plans, all pavement markings shall be multi-component. Pavement markings shall be installed per manufacturer's recommendations and shall meet KDOT 2007 Standard Specifications for State Road and Bridge Construction, Section 806 (for a copy of this, go to http://www.ksdot.org/burConsMain/specprov/2007/806.pdf). Full traffic may not be restored (and substantial project completion achieved) until all pavement markings are in place. Should construction timing be such that restoration of traffic becomes necessary during temperatures prohibiting the installation of permanent markings, the Contractor shall install and maintain temporary markings until such time that permanent markings may be properly installed. Except for the material requirement, temporary pavement markings shall be placed equivalent, in every manner (i.e. dimension, frequency, spacing, etc.), to the permanent marking layout. The cost for temporary pavement markings will not be paid for directly, but shall be considered subsidiary to the bid item for "Pavement Markings".

The following are Standard Special Provisions to the City of Wichita Standard Specifications (1998).

- **Last Revised June 30, 2016 (sm)**

PART 100

1. **Bid Form, Preparation and Final Payment**. Section 102.1, "Preparation of Proposal", add the following: Bids should be prepared showing unit prices, extension amounts and a total of the extended amounts, which shall be the total bid. Below is a brief example of a properly prepared bid:

(PRICES SHALL INCLUDE ALL MATERIAL AND LABOR) [Quantity x Unit Price = Amount]

ITEMS	QUANTITY	UNIT PRICE	AMOUNT
5" AC Pvmt (3" Bit Base)	1234 sy	6.00	7,404.00
Excavation	234 cy	2.00	468.00
Site Clrg & Restoration	1 LS	2,000.00	2,000.00
Bid Total			$9,872.00

LEGEND: LS = Lump Sum, **lf** = lineal ft, **ea** = each, **gl** = gallons, **sy** = square yds, **sf** = square ft, **tn** = tons, **cy** = cubic yds, **cf** = cubic ft, **Unit Price** = price per unit of measure as specified

2. **Revised 01132016 (sm)**
Subcontractors. Section 102.4, "Subcontractors", delete the section and replace with the following: The Successful Contractor shall submit a list of potential Subcontractors with the executed contract on the forms provided by Purchasing. If no Subcontractors are to be utilized, the Contractor shall so indicate on the forms provided by Purchasing.

For non-State/Federal-aid projects, Contractors are encouraged to utilize minority and/or disadvantaged Contractors and Suppliers whenever possible. The City shall identify and certify DBE's and MBE's. Prior to payment of the final estimate, the Contractor shall be required to submit a list of Subcontractors and Suppliers actually used on the project along with the dollar amount paid per Subcontractor. Failure to submit the list of Subcontractors used will result in a delay of the final payment until such list is provided.

For State/Federal-aid projects, the awarded Contractor shall ensure that all FHWA-1273 documentation included in the project bid proposal is also included in Subcontractor agreement(s) or contract(s) for this project. Contractor will provide the City Engineer with a copy of said Subcontractor contract(s) for compliance purposes.

3. **Tax Exempt Status.** Section 102.6, "Sales Tax Exemption", replace first paragraph with the following: Most contracts for projects let through the City Engineer's office are exempt from State and Local sales taxes. Projects that are not exempt will be clearly identified in the bid solicitation. Do not include sales tax in your bid unless clearly directed to do so. Water projects are sales tax exempt.

4. **Davis-Bacon Wage Determination.** Section 102.7, "Equal Employment Opportunity", add the following: On State/Federal-aid contracts, Contractor is required to pay Davis-Bacon wages and meet the requirements of the Davis-Bacon Wage Act **for the entire project, including non-participating work**. Compliance with the Davis-Bacon Act (40 U.S.C. 276a to a-7) as supplemented by Department of Labor regulations (29 CFR Part 5) (Construction contracts in excess of $2,000 awarded by grantees and sub grantees).

5. **Schedule of Values.** Add Section 102.15 as follows:
102.15 SCHEDULE OF VALUES
Upon award of the contract, the Contractor shall submit a schedule of values to the Project Engineer, for all bid items with a quantity and unit of measure of "1 LS". The schedule shall include information relevant to how the Contractor intends to be paid for these respective items, to be approved by the Project Engineer prior to beginning construction.

6. **DBE Requirements for State/Federal Aid Projects**. Add Section 102.45 as follows:
102.45 DBE REQUIREMENTS FOR STATE/FEDERAL AID PROJECTS
The Contractor shall be required to meet the DBE goal as designated in the respective bid proposal. (1) DBE's must be certified by KDOT. A list of KDOT certified DBE's may be found on the Internet at www.ksdot.org/divadmin/DBEConstruction/dbedir.aspx. (2) For each DBE listed by the successful bidder,

the City will send a letter to them requesting their concurrence that they intend to perform the work indicated in the Contractor's bid and the dollar amount. (3) For each month that the DBE works, they must submit to the City a copy of the completed DBE Payment Affidavit. (4) In addition, the Contractor must comply with the "Payment to Subcontractors" Contract Provision.

7. **Pre-Qualified Contractors List.** Add Section 102.51 as follows:
102.51 PRE-QUALIFIED CONTRACTORS LIST
For state/federal aid projects, the prime contractor must be on the Kansas Department of Transportation's pre-qualified contractors list. A bid submitted by a contractor not on the list will be considered non-responsive and rejected. KDOT's pre-qualified contractors list can be found at http://www.ksdot.org/divoperat/rptInternetList.pdf.

8. **Basis of Award**. Section 103.2, "Award of Contract", add the following: The contract shall be awarded on the basis of the **lowest responsible Base Bid**, provided the bid is within the Engineer's Estimate. If applicable, Add Alternate(s) may be accepted as determined by the City after the bids are opened, as available funding may allow.

9. **Liability Insurance Specifications.** Section 103.5 shall be replaced with:

The **Successful Bidder** will be required to furnish a Certificate of Insurance (prior to the Purchase Order, Agreement, or Contract being issued) with the following minimum coverage:

1. Commercial General Liability
Covering premises---operations, xcu hazards when applicable, Product/Completed Operations, Broad Form Property Damage and Contractual Liability with minimum limits as follows:

Bodily Injury Liability	$500,000 Each Occurrence $500,000 Each Aggregate
Property Damage Liability	$500,000 Each Occurrence $500,000 Each Aggregate
Or	
Bodily Injury and Property Damage Liability (Combined Single Limit)	$500,000 Each Occurrence $500,000 Each Aggregate

2. Comprehensive Automobile Liability
All Owned, Non-Owned, and Hired vehicles with minimum limits as follows:

Bodily Injury Liability	$500,000 Each Accident
Property Damage Liability	$500,000 Each Accident
Or	
Bodily Injury and Property Damage Liability (Combined Single Limit)	$500,000 Each Accident

3. Workers' Compensation	Statutory
Employers Liability	$100,000 Each Accident $500,000 Aggregate $100,000 Occupational Disease

The Insurance Certificate must contain the following:

Statement that the Contractual Liability includes the Liability of the City of Wichita assumed by the Contractor in the contract documents.

The Certificate of Insurance must be submitted **within ten (10) days** after notification of award to the City of Wichita Purchasing Manager, City Hall, 12th Floor, 455 North Main, Wichita, Kansas, 67202-1694.

10. **Dewatering.** Section 104.1, "Work to be done", add the following: If dewatering is necessary on this project, the Contractor shall contact the Environmental Services Department at (316) 268-8351, to determine if the groundwater requires special handling. The cost of dewatering is subsidiary to pipe installation bid items and not to be bid or paid separately.

11. **Project Erosion Control Requirements.** Section 104.3, "Cleanup, Dust Control, Pollution Control, Surface Water and Erosion Control", add the following: The Contractor must implement erosion control measures on this project using Best Management Practices (BMPs). BMPs used may include silt fence and hay bale barriers, perforated (gravel filled) pipe inlet protection, or other as specifically approved by the City Engineer's Office. Gravel Packs and sand bags at inlets will no longer be accepted. The Contractor will comply with all sections of Ordinance #44-123 and practice 'good housekeeping' at all times. Any dirt or mud tracked off the Contractor's construction site onto paved public or private streets, or ditches, or discharges of same into lakes, ponds, ditches or storm sewers must be cleaned up within 24 hours. Failure to abide by these requirements may result in the assessment of fines, as provided in Ordinance #44-123. Ordinance #44-123 is referenced in Chapter 16.32 of the City Code, which may be viewed on the City's website.

    Construction activities that will, either individually or in combination with other related projects, disturb a total of one or more acres (as determined by the City Engineer) are subject to the requirements of the Kansas Water Pollution Control (KWPC) General NPDES Permit. If applicable to this project, a copy of the permit, including the Notice of Intent (NOI) and the Storm Water Pollution Prevention Plan (SWPPP) prepared by the Engineer, is attached for detailed review. The SWPPP prepared by the Engineer is for information only and the contractor will be required to submit a project specific SWPPP to the City for approval prior to beginning construction. The terms and conditions of the KWPC general permit may be found on the KDHE website at www.kdheks.gov/stormwater/cons_stormwater_permit.htm. A copy of the attached Contractor's Certification Form, certifying comprehension of the general permit and SWPPP requirements, must be signed and submitted to the Field Engineer prior to starting construction.

    During construction, the Contractor must maintain copies of the approved NOI and SWPPP on the construction site at all times. Should the Contractor's intended construction sequence or approach differ from that described in the approved SWPPP, the Contractor must submit an amended SWPPP to the City for review and approval, prior to enacting the change.

12. **Maintenance of Existing Pavement/Snow Removal.** Sections 104.4, "Maintenance of Roadway and Sidewalk Surfaces", replace the first paragraph with the following: The Contractor shall examine the condition of the existing pavement and haul roads prior to bidding. The maintenance of the existing pavement and haul roads, extending to the limits of traffic control in all directions, will be the Contractor's responsibility upon award of the contract, through project final acceptance. Such maintenance shall include maintaining the traveled portions of roadways and walkways in smooth and acceptable surface conditions free from potholes settlements, elevation offsets, etc.

    Also add the following to the same section of 104.4 for snow removal during construction:

    Snow removal. Section 104.4 , "Maintenance of Roadway and Sidewalk Surfaces", add the following: The Contractor will be required to perform snow removal within the limits of the traffic control upon request by the Engineer. The contractor will be paid on a force account basis per the latest KDOT Specifications. Contractor is required to restore any traffic control devices impacted by snow removal operations at the contractor's expense. This includes any traffic control disturbed by City crews during snow/ice operations. Contractor is also required to clean traffic control devices during construction to restore reflectivity and visibility to MUTCD requirements.

13. **Work Zone Safety and Mobility.** Section 104.5, "Maintenance of Work Areas", add the following: On State/Federal-aid contracts, the Contractor shall be required to provide the Project Engineer with the name

of a work zone safety and mobility contact for the project, prior to beginning work. This will also include a 24-hour contact number for that person and proof that they have completed an **Advance Work Zone** course, **ATTSA's Traffic Control Supervisor** course or an approved equivalent training course.

14. **Schedule.** Add Section 105.15 as follows:
105.15 SCHEDULE
For state/federal aid projects and any others that effect existing traffic patterns, the Contractor shall be required to submit a proposed work schedule to the Engineer, for approval, prior to beginning work. The Engineer can also request a schedule on any other type of project, if needed. The Contractor shall plan and schedule work to produce the least interference with traffic, businesses, and home owners and to minimize the use of planned detours. The Schedule shall provide enough detail so the Engineer may determine the Controlling Item of Work (CIOW) and other activities that affect the contract time. The Engineer will request the Contractor to submit a revised Schedule if the Engineer believes the Schedule is unworkable, or if the work has fallen behind. The Contractor shall notify the Engineer of Schedule changes, delays, or both regardless of whether additional time or money is being sought. The contractor shall submit an updated schedule for the following: as requested by the Engineer at any time; any contract/scope of work changes; when the sequence of activities is altered; and/or the time changes for performing an activity

15. **Reasonable Access**. Section 105.7, "Inspection", add the following: Successful Contractor must allow City Inspectors and vehicles reasonable access onto the project site.

16. **Discrepancies in Contract Documents.** Add Section 105.8 as follows:
105.8 DISCREPANCIES IN CONTRACT DOCUMENTS
If there is a discrepancy between Contract Documents, the order of precedence is:
    1. Project Addenda
    2. Project Specific Special Provisions
    3. Standard Special Provisions to the City of Wichita Standard Specifications
    4. Plans
    5. Standard Specifications

17. **Buy America Materials.** Add Section 106.15 as follows:
106.15 BUY AMERICA MATERIALS
On State/Federal-aid contracts, the Contractor shall be reminded that the current KDOT Special Provision for "Buy America" applies to all items of work on the project, including "non-participating" bid items.

18. **Revised 022315 (sm)**
Water Usage. Section 107.5, "Use of Fire Hydrants", delete the section and replace with the following: Contractors wishing to use water from a City fire hydrant shall be required to obtain a Fire Hydrant Usage Permit. The user shall contact the Public Works & Utilities Department Meter Repair Shop at (316) 219-8925 for permit and meter costs, availability, and detailed information. The Contractor shall be directly responsible for all costs associated with using City water, and the costs will not be billed to or paid for by a specific project. The cost for hydrant meter rental and for the water usage itself will NOT be tax exempt. Water usage for filling, flushing and sampling of new water lines will be excluded from this requirement, and will not require a permit. If the contractor is using a water tank that is filled by a fire hydrant or other publicly supplied water source in the water system, they are required to have the water tank inspected for required backflow protection and permitted by City personnel. Failure to get the inspection and associated annual permit will lead to a fine as defined by municipal codes 17.12.240 and 17.12.320. Construction activities associated with the project will cease until the issue is resolved. Contractors shall inquire about the inspection and annual permit when picking up the fire hydrant meter.

19. **Electronic Message Boards.** Section 107.8, "Notifications by Contractor", add part "e)" as follows: When a bid item for "Sign, Electronic Portable Message" is included in the project, the contractor shall be required to provide the same, with as many as four message boards expected to be used at any one time, unless otherwise specified. This will be a final measured quantity bid

item, with the signs to be utilized as directed by the Project Engineer, prior to and during the project.

20. **Traffic Control Devices.** Section 107.9, "Work Zone Traffic Control", add the following: All traffic control devices to be used on the project shall conform to the requirements of the KDOT "General Traffic Control" detail sheet (TE700, or current version). The Contractor shall be aware of the particular requirements of the item referencing "NCHRP Report 350 Crashworthy Requirements". Certification for the same shall be received and approved by the Project Engineer prior to beginning work on the project.

21. **Added 061215 (sd)**
Working Days. Section 108.5, "Working Days", item "h)", delete the first sentence and replace with the following: Working Day reports will be available for the Contractor's review by the end of the following week in the Construction Division Field Office, located at the Central Maintenance Facility, 1801 S. McLean Blvd.

    Add the following: The Working Day reports shall remain in the Field Office at all times. Copies are available upon request if the Contractor desires any for their records.

22. **Partial Payments.** Section 109.6, "Partial Payments and Retainage", add the following: The awarded Contractor shall waive all rights on all partial estimate calculations, and estimates shall be processed without the Contractor's review and authorization. However, Contractor shall review and approve the final payment at the completion of the project. The Contractor may request partial estimate review and approval by written request submitted with the signed contract.

    Also in Section 109.6, replace the third paragraph with the following: Partial payments will only be made for stored materials when indicated in the "Project Specific" provisions for each project.

    Also in Section 109.6, add the following: On Federal Aid contracts only, the City will release retainage on bid items installed by subcontractors upon acceptance of the work. Contractor must make payment to Subcontractor(s) for such work within 30 days of payment by the City. Proof of payment to Subcontractor(s) shall be provided to the City via Form 1010.

23. **Final Payment Requirements:** Add to Section 109.7, "Acceptance & Final Payment":
Final Payment Requirements. Time is of the essence when completing City paperwork related to the Project. Paperwork required from the Contractor for the Project, including but not limited to certification of pipe, beam, manholes or other structural materials; State of Kansas Project Completion Certification; Affidavit of paying all claims, liens and subcontractors; Statement of Subcontractors and Supplies; and any other document needed for project closeout shall be submitted within 60 days of substantial completion of any project. City shall transmit to the Contractor the Final Summary for the project as soon as reasonably possible. Failure by Contractor to submit any objection, correction, or modification within 90 days of transmittal of a Final Summary shall constitute waiver of such right to contest and will be deemed final acceptance of the City's calculations. Such waiver will be a full and final waiver of all rights to object to or contest City calculations of quantities provided, provision of lump-sum materials or payment amounts owed to Contractor and shall be binding on Contractor for purposes of any dispute or litigation. For purposes of retainage and/or compliance with the Fairness in Construction Acts, any contractual payment owed is deemed disputed until the Final Summary is expressly accepted as shown by contractor's signature on a copy returned to the City or until Contractor has waived the opportunity to contest final summary calculations by the City of Wichita.

PART 200

1. **Underground Irrigation Systems**. Section 201.3, "Sprinkler Systems", delete the section and replace with the following: Properties within the project may have underground irrigation systems (lawn sprinklers)

which conflict with new construction. Contractor shall remove such components as needed during construction of the project, salvaging all sprinkler heads, valves and operators, and pertinent controllers/equipment to the property owner, where possible. Portions of underground irrigation systems not in conflict with new construction shall be protected from damage and shall remain in place. The Contractor shall exercise caution, through communication with the property owner, to insure that work completed as part of the project does not adversely affect the operation of existing irrigation system(s) on private property, behind the right-of-way. The Contractor is to coordinate final site restoration with the property owner, such that they are afforded the opportunity to replace the irrigation system prior to sod/seed installation. All work associated with this item will not be paid for separately, but considered SUBSIDIARY to the "Site Clearing" bid item, or equivalent equal.

2. **Tree Removal.** Section 202.2, "Hedge and Tree Removal", delete the second paragraph and replace with the following: Unless otherwise indicated on the plans or in the "Project Specific" Special Provisions, all projects shall include bid items for "Large Tree Removal" and "Small Tree Removal", if applicable. Any tree 15 inches in diameter or larger, as measured 24 inches above the natural ground level shall be considered a "Large Tree" for payment purposes. Any tree less than 15 inches in diameter, as measured 24 inches above natural ground level shall be considered a "Small Tree" for payment purposes. All tree removal will be approved by the Project Engineer prior to completing the work.

PART 300

1. **Excess Excavation Disposal.** Section 301.4, "Surplus Material", delete the section and replace with the following: Unless otherwise directed by the plans, project special provisions or addenda, all excess excavation will become the property of the Contractor, to be disposed of at a location determined also by the Contractor. The Contractor shall be aware of and take responsibility for obtaining required permits to place any fill in a designated floodplain, floodway or special management areas. Special management areas would include wetlands, US Corp of Engineer's holding areas, detention ponds, etc. Contact City of Wichita at (316) 268-4498 for flood determinations within the City limits. For flood determinations outside of the City, contact Sedgwick County Code Enforcement at (316) 660-1840.

PART 400

1. **Geogrid Reinforced Aggregate Base.**

Delete Section 404.1, "Crushed Rock Base For Concrete Paver Surface".

Replace Section 404.2, "Materials", with the following:

404.2 MATERIALS
General:
Materials to be used for geogrid reinforced base construction shall consist of virgin crushed stone, recycled Portland cement concrete, or a blend of recycled Portland cement concrete and Reclaimed Asphalt Pavement (RAP). This blend is not to exceed 50% RAP and shall be tested by use of an asphalt burn off oven to ensure compliance. All materials shall meet the following gradation specification.

Stone/Concrete / Blended Aggregate:
1) Gradation

Sieve Size	% Retained (by dry weight)
2-1/2"	0
3/4"	20-60
#4	50-80
#40	80-94

2) Durability
Virgin base material quality shall conform to the requirements specified by the KDOT Subsection 1102 for Durability Class 1.

3) Absorption
All virgin base material shall have a maximum absorption of four percent (4%).

Biaxial Geogrid:
The geogrid shall be a regular grid structure formed to provide tensile strength biaxially, both in the machine and cross machine directions of the grid, and shall have aperture geometry and rib and junction cross-sections sufficient to permit significant mechanical interlock with the material being reinforced. The geogrid shall maintain its reinforcement and interlock capabilities under repeated dynamic loads while in service and shall also be resistant to ultraviolet degradation, to damage under normal construction practices and to all forms of biological or chemical degradation normally encountered in the material being reinforced.

The geogrid shall be a single layer, non-bonded mat. A list of approved geogrids can be found on the City of Wichita website at http://www.wichita.gov/Government/Departments/PWU/Pages/Regulations.aspx. Unless otherwise specified in the plans or project provisions, the Contractor shall be allowed to use any geogrid or geotextile fabric on the Approved Materials List, for base reinforcement. The same product shall be used throughout a project, unless approved by the Engineer prior to installation.

Standard Biaxial Geogrid

PROPERTY	TEST METHOD	UNITS	VALUE	
			MD[1]	CMD[1]
Interlock				
Open Area	COE Method[2]	% (min)	70	
Reinforcement				
Tensile modulus				
Initial (@ 1% strain)	ASTM D 6637	lb/ft (min)	14,000	20,000
Tensile strength				
@ 2% strain	ASTM D 6637	lb/ft (min)	270	330
@ 5% strain	ASTM D 6637	lb/ft (min)	540	630
Ultimate	ASTM D 6637	lb/ft (min)	850	910
Junction strength				
Ultimate	GRI-GG2[3]	lb/junction (min)	30	
Ultimate	GRI-GG2[3]	lb/ft (min)	360	360
Material				
UV Resistance (@ 500 hours)	ASTM D 4355	% Strength Retained (min)	60	

Notes:
1. **Machine Direction (MD) is along roll length and Cross Machine Direction (CMD) is across roll width.**
2. **Percent open area measured without magnification by Corps of Engineers method as specified in CW 02215 Civil Works Construction Guide, November 1977.**
3. **Revised July, 2000.**

High Strength Biaxial Geogrid

PROPERTY	TEST METHOD	UNITS	VALUE	
			MD[1]	CMD[1]
Interlock				
Open Area	COE Method[2]	% (min)	70	
Reinforcement				
Tensile modulus				
Initial (@ 1% strain)	ASTM D 6637	lb/ft (min)	27,500	45,000
Tensile strength				
Initial (@ 1% strain)	ASTM D 6637	lb/ft (min)	275	450
@ 2% strain	ASTM D 6637	lb/ft (min)	410	620
@ 5% strain	ASTM D 6637	lb/ft (min)	810	1340
Ultimate	ASTM D 6637	lb/ft (min)	1310	1970
Junction strength				
Ultimate	GRI-GG2[3]	lb/junction (min)	30	
Ultimate	GRI-GG2[3]	lb/ft (min)	360	360
Material				
UV Resistance (@ 500 hours)	ASTM D 4355	% Strength Retained (min)	70	

Notes:

1. **Machine Direction (MD) is along roll length and Cross Machine Direction (CMD) is across roll width.**
2. **Percent open area measured without magnification by Corps of Engineers method as specified in CW 02215 Civil Works Construction Guide, November 1977.**
3. **Revised July, 2000.**

Geotextile Fabric:

The fabric shall consist of high tenacity monofilament and fibrillated polypropylene yarns. The fabric shall maintain its reinforcement, filtration, and separation capabilities under repeated dynamic loads while in service and shall also be resistant to ultraviolet degradation, to damage under normal construction practices and to all forms of biological or chemical degradation normally encountered in the material being reinforced.

The fabric shall be a single layer, non-bonded material. A list of approved fabrics can be found on the City of Wichita website at http://www.wichita.gov/Government/Departments/PWU/Pages/Regulations.aspx. Unless otherwise specified in the plans or project provisions, the Contractor shall be allowed to use any geogrid or fabric on the Approved Materials List, for base reinforcement. The same product shall be used throughout a project, unless approved by the Engineer prior to installation.

Standard Geotextile Fabric

PROPERTY	TEST METHOD	UNITS	VALUE
Characteristics			
Coefficient of Interaction Ci (Sand)	ASTM D 5321		0.8
Flow Rate	ASTM D 4491	gal/min/ft	40
Permeability	ASTM D 4491	cm/sec	0.050
Permitivity	ASTM D 4491	1/sec	.0152
AOS	ASTM D 4751	US Sieve #	30
Reinforcement			
Tensile strength			
@ 2% strain	ASTM D 4595	lb/ft (min)	540
@ 5% strain	ASTM D 4595	lb/ft (min)	1350
Ultimate	ASTM D 4595	lb/ft (min)	2700
Material			
UV Resistance (@ 500 hours)	ASTM D 4355	% Strength Retained (min)	70

High Strength Geotextile Fabric

PROPERTY	TEST METHOD	UNITS	VALUE
Characteristics			
Coefficient of Interaction Ci (Sand)	ASTM D 5321		0.8
Flow Rate	ASTM D 4491	gal/min/ft	30
Permeability	ASTM D 4491	cm/sec	0.050
Permitivity	ASTM D 4491	1/sec	0.050
AOS	ASTM D 4751	US Sieve #	30
Reinforcement			
Tensile strength			
@ 2% strain	ASTM D 4595	lb/ft (min)	960
@ 5% strain	ASTM D 4595	lb/ft (min)	2400
Ultimate	ASTM D 4595	lb/ft (min)	4800
Material			
UV Resistance (@ 500 hours)	ASTM D 4355	% Strength Retained (min)	70

Section 404.3, "Construction Requirements", replace "Placing and Overlapping Geogrids" with the following:

Placing and Overlapping Geogrids and Fabrics:

Place geogrid/fabric in position and roll out over the prepared subgrade. Geogrid/fabric should be cut to conform to manhole covers or other protrusions. Geogrid/fabric should be cut and overlapped as necessary to accommodate curves. Unless otherwise indicated in the plans or project provisions, all geogrids and fabrics shall be overlapped one foot (1') in both the longitudinal and transverse directions. Pin overlaps to secure against separation and to provide anchorage. Over very soft ground, wire, plastic ties or hog rings can be used on five to twenty-foot spacings as necessary to secure the overlaps.

2. **Revised 061215 VFA limits (sd)**

Asphalt Pavement Materials and Manufacture. Section 405.2, "Materials and Manufacture", replace from the start of the "Asphalt Cement" subsection to the end of Section 405.2 with the following:

Asphalt Cement:

Asphalt cement shall be of uniform consistency, free from water to the extent that it will not foam when heated to three hundred fifty degrees (350°) F., and it shall meet the following requirements for physical and chemical properties:

Polymer Modified Performance Grade Asphalt Cement

Original Binder:
- Flash Point (°C), 230
- Rotational Viscosity at 135 °C (Pa's), 3 max
- Dynamic Shear at grade temperature (kPa), 1.00 min
- Separation (°C max), 2 max

Rolling Thin Film Oven Residue:
- Mass Loss (%), 1.00 max
- Dynamic Shear at grade temperature (kPa), 2.20 min
- Elastic Recovery at 25 °C, 10 cm Elongation (% min), 65 min

Pressure Aging Vessel Residue:
- Dynamic Shear at test temperature (kPa), 5,000 max
- Creep stiffness at test temperature, stiffness 300 max MPa & m Value 0.300 min

Non-Polymer Modified Performance Grade Asphalt Cement

Original Binder:
- Flash Point (°C), 230
- Rotational Viscosity at 135 °C (Pa's), 3 max
- Dynamic Shear at grade temperature (kPa), 1.00 min

Rolling Thin Film Oven Residue:
- Mass Loss (%), 1.00 max
- Dynamic Shear at grade temperature (kPa), 2.20 min

Pressure Aging Vessel Residue:
- Dynamic Shear at test temperature (kPa), 5,000 max

Creep stiffness at test temperature, stiffness 300 max MPa & m Value 0.300 min

Unless otherwise shown on the plans, all asphaltic concrete pavement placed on city projects shall use PG 64-22 asphalt cement for the full thickness of non-arterial streets, with BC-I and SC-I mix designs for base and surface asphalt, respectively. Arterial streets shall utilize a BM-2 mix design with PG64-22 asphalt cement for the base and PG70-28 for surface. Mill & overlay projects using BM1-B surface mixes shall also use PG 70-28 graded oil. The contractor may substitute an alternate grade of asphalt that complies with or exceeds the upper and lower grade designations for the grade specified. Such substitutions require advanced approval by the Engineer and any additional cost will be the responsibility of the contractor.

Composition of Asphaltic Mixtures:

Aggregates, mineral filler and asphalt shall comply with the requirements, as stated previously in this subsection. The Contractor shall submit to the Engineer before December 31 of each calendar year a complete listing of Individual Aggregate Sieve Analysis, Mix Combination Sieve Analysis and any other pertinent data on the mixes to be used during the following calendar year. The Engineer may use the submitted design in whole or in part, at his discretion. The mix design shall be adjusted as necessary when a change in the source of materials is approved. Any mix design that proves to be unsatisfactory shall be adjusted by the Engineer. There shall not be less than three percent (3%) or more than twenty-five (25%) of material between any two successive sieves in the following series: No. 4, 8, 16, 30 and 50. The requirements for percent retained on the No. 200 sieve (dry screen) will be waived, provided the plasticity index of the mineral filler is four (4) or less.

Salvaged hot mix asphaltic materials may be recycled and combined with new materials to produce asphaltic base course and surface mixtures for use in construction of such base courses and surface courses as required by plans. The combination of salvaged hot mix asphaltic material with new materials shall not exceed thirty-five percent (35%) for base course mixtures or fifteen percent (15%) for surface course mixtures. Recycled materials will not be allowed in the BM-IB surface mixture. All base course mixtures containing recycled asphaltic material shall conform to the standard specification requirements for the base mix used on the project. All surface course mixtures containing recycled asphaltic material shall conform to the standard specification requirements for the surface course mix used on the project.

Gradation Requirements:

Mineral Aggregates Percentage by Weight Retained

Base Sieve Size	**Surface Course BC-I**	**Surface Course SC-I**	**Surface Course BM-2**	**Course BM-IB**
2-1/2"				
1-1/2"				
1"0	0			
3/4"	0-12		0	0
1/2"		0-8		0-10
3/8"	2-35	0-18	8-30	12-26
#4		18-39		39-56
#8	30-66	35-53	42-72	60-76
#10				
#16		50-68		72-87
#20				
#30	60-82	60-80	64-88	79-92
#40				
#50		70-88		84-95
#80				
#100		80-93		88-98
#200	89-96	90-95	90-97	92-98
P-200	4-11	5-10	3-10	2-8

The combined material for asphalt surface course, SC-I, shall contain not less than 47 percent crushed material, including the material passing the No. 200 sieve.

The combined material for asphalt surface course, BM-IB, shall contain not less than 75 percent crushed material, including the material passing the No. 200 sieve. In addition, course aggregate (#4+) used in BM-IB shall have a maximum absorption of two percent.

Design Requirements:
All asphalt mixtures shall conform to the following Marshall requirements when tested in accordance with the latest revision of ASTM D-1559.

Mix Type	**BC-I**	**SC-I**	**BM-2**	**BM-IB**
Min stability (lbs)	1000	1600	1600	1800
Voids (%)	3-7	3-5	3-5	3-5
VFA (%)	**65-78**	**65-78**	**65-78**	**65-78**

BM-IB requirements shall be for a 75-blow Marshall.

3. **Warm Mix Asphalt (WMA).**
Section 405.2, “Materials and Manufacture”, add the following:

When using WMA the Contractor shall submit a mix design to the Engineer for review at the preconstruction conference or prior to starting the project. All materials used in the production of WMA shall comply with the latest City of Wichita Engineering Standard Specifications. The following shall be submitted by the Contractor to Engineer: plant mixing temperatures, temperature range for compacting, WMA technology information and recommended rate of application.

Section 405.3, "Paving Plant", add the following:
WMA may be produced by HMA plant foaming processes and equipment in order to reduce HMA plant production temperatures. WMA chemical and organic additives shall not be allowed on City of Wichita projects. WMA foaming process additive must be on KDOT's prequalified materials list.

Section 405.4, "Paving Plant Operations", add the following:
When using WMA, the mixing temperature may be reduced no more than 30°F for WMA water foaming processes.

Section 405.7, "Placing Requirements", add the following:
All WMA surface course mixtures shall be delivered to the place of construction within a temperature range of between two hundred thirty degrees (230°) F and three hundred thirty-five degrees (335°) F. WMA base mixtures shall be delivered to the place of construction within a temperature range of between one hundred ninety degrees (190°) F and three hundred thirty-five degrees (335°) F. The temperature of the asphaltic mixtures shall be regulated within these limits in accordance with the workability of the mix and the weather conditions. It is the Contractors responsibility to keep the mixture at a suitable temperature that allows proper workability when hand spreading and raking of the material is required in order to meet density requirements.

For WMA mixes containing polymer modified asphalt mixtures with a Performance Grade of 70-28 or greater, and whether for base or surface course, the mixture shall be delivered to the place of construction within a temperature range of between two hundred forty-five degrees (245°) F and three hundred thirty-five degrees (335°) F.

Section 405.8, "Compaction of Mixtures", add the following:
When using WMA, achieve the maximum density before the temperature of the WMA falls below one hundred sixty-five (165°) F. Do not crush the aggregate. On incidental or miscellaneous work, the Engineer may waive the minimum roller requirement if conditions warrant. Roller marks may be removed with a self-propelled static roller when the pavement surface temperature falls below one hundred sixty-five degrees (165°) F for WMA.

4. **Asphalt Pavement Placing Requirements**. Section 405.7, "Placing Requirements", add the following under "Machine Spreading":

When called for in the Project Specific Special Provisions, the contractor shall be required to remix the surface asphalt material hauled to the project site prior to placement. The material transfer device shall be self propelled, capable of moving independent of the paver or attached to the paver. The material transfer device shall perform additional mixing of material and deposit the asphalt into the paver at a uniform temperature and consistency. Acceptable equipment includes a mobile conveyor, material transfer device, shuttle buggy material transfer vehicle, material transfer paver, or paver with remixer conveyor system. The contractor shall take care not to damage the asphalt below the surface course. The contractor must still achieve density requirements in Section 405.8 of the Standard Specification when using equipment listed above. The contractor will not be allowed to dump the wings of the paver receiving hopper during the paving operation.

In addition, replace from the start of the "Placing Temperature" subsection to the end of Section 405.7 with the following:

Placing Temperature:
All asphaltic surface course mixtures shall be delivered to the place of construction within a temperature

range of between two hundred sixty degrees (260°) F. and three hundred thirty-five degrees (335°)F. Asphaltic base mixtures shall be delivered to the place of construction within a temperature range of between two hundred twenty degrees (220°) F. and three hundred thirty-five (335°) F. The temperature of the asphaltic mixtures shall be regulated within these limits in accordance with the workability of the mix and the weather conditions. The temperature of the asphaltic materials shall be maintained at the above indicated maximum temperature when hand spreading and raking of the material is required.

For polymer modified asphalt mixtures with a Performance Grade of 70-28 or greater, and whether for base or surface course, the mixture shall be delivered to the place of construction within a temperature range of between two hundred seventy-five degrees (275º) F and three hundred thirty-five degrees (335º) F.

Weather Limitations for Placing Asphaltic Mixtures:
Asphaltic mixtures shall not be placed on any wet or frozen surface or when the weather conditions otherwise are detrimental to the proper handling or finishing of such mixtures. Asphaltic mixtures shall not be placed when the air temperature as measured in the shade is less than 40°F. Asphaltic base course material with thicknesses of three inches (3") or more may be placed when the air temperature as measured in the shade is 30°F or above with the approval of the Engineer if density and Marshall requirements can be obtained.

For polymer modified asphalt mixtures with a Performance Grade of 70-28 or greater, base mixtures may be placed when the air temperature as measured in the shade is 45ºF or above, and surface mixtures may be placed when the temperature as measured in the shade is 50ºF or above, with the approval of the Engineer and if density and Marshall requirements can be obtained. In addition, the asphalt surface temperature for all subsequent placement after first base lift shall be 50ºF or above.

5. **Coarse Aggregate for Portland Cement Concrete Pavement.** Section 406.2, "Materials", delete the following sentence of the "Coarse Aggregate" subsection:
   "The soundness requirement will be waived if the aggregate meets all the requirements for durability of Class I aggregate as specified in the KDOT Standard Specifications."

6. **Fly Ash Substitution of Portland Cement.** Section 406.2, "Materials", add the following:
   Fly Ash:
   All fly ash shall meet the requirements of ASTM C-618, Class C. Certificates shall be provided identifying the source of the fly ash for review and approval by the Engineer. Fly ash such as produced in furnace operations utilizing liming materials or soda ash (sodium carbonate) as an additive shall not be acceptable. The maximum substitution of Portland Cement with fly ash in any fly ash-approved city concrete mix shall not exceed 15% by weight. All fly ash suppliers must submit test data from the previous 12 months and monthly reports from then on to support compliance with ASTM C-618. All concrete mix designs, including those with fly ash, shall be approved by the Engineer prior to use.

7. **Added 061215 (sd)**
   Concrete batch tickets. Section 406.2, "Mixing", add the following: Provide a batch slip issued at the batching plant including batch weights of every constituent of the concrete and time of charging of the mixer drum with cementitious material and aggregates. Include quantities, type, product name and manufacturer of all admixtures on the batch ticket for each batch delivered to the project.

8. **Immersion Vibrators.** Section 406.3, "Placing and Finishing", add the following: All concrete pavement, including streets, driveways, valley gutters, and intersections shall be vibrated with an immersion vibrator. Use of a vibrating screed as the sole source for consolidation of concrete pavement will not be allowed.

9. **Sand Cushion.** Section 407.3, "Construction Requirements", replace the first sentence of the sixth paragraph with the following: A sand cushion may be placed on the foundation prior to the construction of sidewalk, driveway approaches and wheel chair ramps when approved by the Engineer. Sand cushion is not allowed under curb and gutter and street pavement.

10. **Sidewalk Slope.** Section 407.5, "Sidewalks", replace the first sentence in the second paragraph with the following:
Sidewalk shall have a **maximum** cross slope of one-quarter inch (1/4") per foot.

11. **Added 061215 (sd)**
Pavement Markings. Add Section 411 as follows:
411 PAVEMENT MARKINGS
Unless otherwise indicated on the plans, all pavement markings for asphalt pavement shall be thermoplastic; for concrete shall be epoxy. Pavement markings shall be installed per manufacturer's recommendations and shall meet KDOT 2007 Standard Specifications for State Road and Bridge Construction, Section 806 (for a copy of this, go to http://www.ksdot.org/burConsMain/specprov/2007/806.pdf). Full traffic may not be restored (and substantial project completion achieved) until all pavement markings are in place. Should construction timing be such that restoration of traffic becomes necessary during temperatures prohibiting the installation of permanent markings, the Contractor shall install and maintain temporary markings until such time that permanent markings may be properly installed. Except for the material requirement, temporary pavement markings shall be placed equivalent, in every manner (i.e. dimension, frequency, spacing, etc.), to the permanent marking layout. The cost for temporary pavement markings will not be paid for directly, but shall be considered subsidiary to the bid item for "Pavement Markings".

The contractor shall be required to grind off or cover any conflicting pavement markings within the traffic control limits for the project. The pavement markings shall be replaced at the conclusion of the project in accordance with this section. All costs associated with this work shall be subsidiary to the bid item for "Traffic Control". If no "Traffic Control" bid item exists, the costs shall be considered subsidiary to other bid items.

PART 700

1. **Electrical Billing.** Section 701.2, "Contractor Responsibilities", replace the fourth paragraph with the following: The Contractor shall notify the appropriate power company prior to any service connection or attachment to determine the proper type and method of hook-up or installation. The cost of any initial hook-up charge will be paid by the City of Wichita directly to the utility. Electrical service to a contractor provided field office will not be directly billed to the City, but paid for through the bid item provided for the same. The contractor shall not use any City paid utility service for their construction operations.

2. **Added 061215 (sd)**
Ownership and Maintenance of Existing Traffic Signals. Section 701.2, "Contractor Responsibilities", add the following: Upon issuance of the Notice to Proceed, the Contractor will assume all responsibilities associated with ownership and maintenance of existing traffic signals within the project when the project installs a new traffic signal or upgrades any component utilized in the operation of the existing traffic signal. Contractor will have ownership and maintenance of the existing traffic signal until released by the City's Traffic Engineer.

PART 800

- **All AWWA references shall be for the latest revision regardless of the date shown.**
- **All reference to "Appendix 1" shall be considered Appendix D".**

1. **Revised 061215 Approved quarries (sd)**
Type I Pipe Bedding Material. Section 801.2, "Pipe Bedding", item "a)", revise to read as follows:
Type I Pipe Bedding Material will be crushed rock conforming to ASTM C-33, Gradation No. 67, and

will meet all requirements for Portland Cement Concrete Pavement Coarse Aggregate, section 406.2, City of Wichita Standard Specifications.

As of June 12, 2015, approved Suppliers for Type I bedding are:

Dolese	Richard Spurs quarry	Lawton, Oklahoma
Cornejo Quality Stone	Harshman quarry	Moline, Kansas
Martin Marietta	Blake quarry	Severy, Kansas
Whittaker	Whittaker quarry	Winfield, Kansas

2. **Trench Stabilization (Improved Bedding)) for Pipes in Groundwater**. Section 801.4, "Trench Stabilization", delete the second paragraph and replace with the following: Trench stabilization must be installed when any level of groundwater or unstable soils are encountered. Trench stabilization for sanitary/storm sewer pipe will consist of over excavation and placement of Type I bedding material, a minimum of six inches under and on the sides of the pipe, up to middle of the pipe. Any trench stabilization required as a result of surface water entering the trench or to correct inadvertent over-depth trenching will be installed at the Contractor's expense. All Type I bedding material for trench stabilization must be approved by the City's Materials Testing Lab prior to use.

3. **Improved Bedding.** Section 801.5, "Improved Bedding", revise the first sentence under "General" to the following: Improved bedding shall consist of the zone from six inches (6") under the barrel of the pipe extending to a level twelve inches (12") above the top of pipe.

   "Sanitary/Storm Sewer, revise paragraph "a" as follows:

   > **Improved bedding for rigid pipe** shall consist of Type 1 or 2 Pipe Bedding Material under the barrel of the pipe extending up to a level equal to the middle of the pipe. Type 3 Pipe Bedding Material shall be used from this level to a level twelve inches (12") above the top of the pipe.

4. **Rock Bedding for Structures**. Section 801.5, "Structures", add the following: All sanitary, storm sewer, water and traffic structures, including but not limited to Reinforced Concrete Box Culverts, Curb Inlets, Area Inlets, Manholes, Water Vaults, Air Release Vaults and Traffic Service Boxes must have a minimum of 6" of Type I bedding material placed under the structure, to the limits of excavation. Improved bedding material for these structures will not be paid for separately, but will be considered subsidiary to the bid item for the structure itself. All Type I bedding material for sewer and water structures must be approved by the City's Materials Testing Lab prior to use.

5. **Backfill Requirements.** Section 801.6, "Backfilling and Compaction", delete the fifth paragraph under "General" and replace with the following:
   Trenches to be sand backfilled as called out on the plans or in the Project Specific Special Provisions, or when the excavated material is not suitable for backfill material as determined by the Engineer, shall be consolidated by flushing as follows. The top one foot (1') of trenches to be flushed shall be earth backfill compacted to a density equal to or greater than the existing adjacent undisturbed material. Sand backfill material to be flushed shall be placed in six feet (6') maximum lifts when the trench is within alley or street right-of-way, and in twelve feet (12') maximum lifts when the trench is outside of alley or street right-of-way. Each lift shall be thoroughly consolidated by using water jets and vibrators. Consolidation of sand backfill by flushing and vibrating shall result in a final density which equals or exceeds ninety percent (90%) of the standard density. Water shall be applied so that effective settlement is obtained with a minimum amount of water. Trenches shall not be permitted to overflow. Special care must be taken during backfilling, flushing, and compacting operations to prevent pipe from floating. Water shall be introduced into the layer being flushed through a long pipe nozzle and in such a manner that the granular fill, tamped material or the previously placed layer will not be disturbed, and in no case shall the nozzle end be inserted closer than three feet (3') above the top of the pipe.

6. **Boring and Jacking Installation**. Section 802.3 "Pipe Installation by Boring and Jacking Methods", replace the first paragraph and the first two sentences of the second paragraph with the following:
   Water and sanitary sewer pipe shall not be installed by boring and jacking methods directly unless approved by the engineer. All carrier pipes within casing shall be approved restrained joint pipe that

shall extend a minimum of three feet (3') past each end of the casing.

Steel casing shall be installed by boring and jacking methods where specified by the plans. Pipe will not be allowed to be bored and jacked directly.

7. **Casing End Seal.** Section 802.3, "Pipe Installation by Boring and Jacking Methods", add the words "Approved flexible" before "end seals".

8. **Fire Hydrants**. Section 803.3, "Materials", delete the full "Fire Hydrants" subsection and replace with the following for all water projects.

A) General - The fire hydrants supplied under these specifications must meet in every way the American Water Works and New England Water Works Association Standard Specifications for Fire Hydrants for Ordinary Water Works Service, AWWA C502-54, or the latest revision thereof, except as herein specifically noted and as herein supplemented. Section number in most instances makes direct reference to the above AWWA Specification.

B) Traffic Type Fire Hydrant - The fire hydrant shall be of the traffic accident type, so that in the event of traffic accident the barrel will not become broken, nor the main operating stem become broken or bent. Only the safety flange or safety breaker bolts joining the upper and lower barrel sections can be damaged in the event of a traffic accident, which parts shall be easily and quickly replaceable.

C) Fire Hydrant Requirements - The fire hydrant must meet the following requirements:

1) Shutoff shall be with pressure by compression.
2) The inlet connection shall be a 6" mechanical joint. Required glands, gaskets, bolts and nuts required shall be supplied with the fire hydrant. Tee head bolts and nuts shall be of Corten material.
3) **Provisions shall be made for lengthening the hydrant without the necessity of excavation.**
4) All working parts of the valve shall be removable through the top of the hydrant without the necessity of excavation. Removal of parts shall be accomplished with the use of a small hydrant hand tool.
5) All parts entering into the manufacture of the fire hydrants shall be interchangeable.
6) The top of the hydrant shall be so constructed that the operating threads are immersed in a sealed oil or grease reservoir. "O" ring seals shall be used to prevent water and oil leakage. The stem shall be bronze lined where it passes through the "O" rings. The operating nut shall be provided with seal or shield.
7) The interior of the shoe shall be coated with a cement mortar lining in accordance with AWWA C-104-53, or the latest revision thereof; or with a catalyst cured or electro fused epoxy, minimum thickness 10 mils.

D) Fire Hydrant Valve - The fire hydrant valve shall meet the following requirements:

1) The main valve assembly shall be seated in a sub-seat of all bronze material so as to provide bronze to bronze engagement of the valve seat ring and to provide a drainage channel of non-ferrous material.
2) The entire valve assembly, including lower valve plate, shall be bronze or stainless steel. The lower stem, viz. that portion below the lower valve plate, shall be completely enclosed with bronze cap nut or nuts.
3) Valve facing – The main valve shall be faced with balata, hycar rubber, or approved equal.
4) The fire hydrant main valves must move from full closed to full open in not less than 12 complete turns and not more than 18 complete turns of the operating nut.
5) Any spring assembly between the stem and the main valve, used by the manufacturer to facilitate operations, shall be composed of either bronze or stainless steel.
6) The fire hydrant must open left (counter clockwise).

7) The hydrant must have two drain valves for automatic draining of the barrel when the main valve is closed. The City of Wichita Public Works and Water Utilities Material Review Board may grant exceptions to this requirement on an individual hydrant model basis.
8) The main valve shall be designed to provide for flushing at the drain valves during the first four turns of opening the main valve.
9) The main valve opening shall be 4.5 inches unless otherwise specified.
10) The operating nut and cap nuts shall be a 1.5 inch pentagon to match operating nuts on hydrants now in system.

E) Revised 052915 (jk)

Nozzles - The fire hydrant must have three nozzles:

1) Two 2.5 inch nominal nozzles with 2.5 inch national standard thread.
2) One 5 inch Storz pumper nozzle with cable attachment. Chains shall not be accepted.
3) The 2.5 inch nozzles shall be joined to the barrel by either a threaded or twist-lock type joint. The threads provided shall match threads now in service with other fire hydrants in use in the City of Wichita.
4) The hydrant pumper nozzle shall be of one-piece design compatible with 5" Storz hose coupling. The nozzle shall be an integral part of the fire hydrant and must be furnished by the manufacturer. Storz adapters will not be accepted.

F) Fire Hydrant Materials - The materials used in the manufacture of the fire hydrant shall be as follows:

1) All iron castings shall be made from a superior quality iron and of even grain and must possess a tensile strength of not less than 32,000 pounds per square inch.
2) Flange bolts and nuts shall be of Everdur, stainless steel, or Corten for that type fire hydrant employing drainage between flanges of shoe and barrel.
3) Stuffing box packing must have "O" ring seals for upper stem.
4) Gasket material shall be rubber composition.
5) The epoxy coating shall be applied as follows:
   (a) The casting shall be grit or sand blasted to bare metal, blown free of dust, and then cured by heating to 135°F.
   (b) The coating shall be applied in a dust free area.
   (c) The coating shall be applied in not less than three applications of equal thickness.

G) Fire Hydrant Color - The nozzle caps and bonnet of the fire hydrant shall be red and all other parts above ground shall be aluminum color.

H) Approved Hydrants - A list of approved fire hydrants can be found on the City of Wichita website at http://www.wichita.gov/Government/Departments/PWU/Pages/Regulations.aspx.

9. **Separation of Water Mains and Sewers.** Section 803.4, "Separation of Water Mains and Sewers", delete subsection "a" and replace with the following subsections:

a) Gravity Sanitary Sewers. When potable water pipes and gravity sanitary sewers are laid parallel to each other, the horizontal distance between them shall be not less than 10 feet regardless of elevation difference. The distance shall be measured from edge to edge. The laying of water pipes and sanitary sewers shall be in separate trenches with undisturbed earth between them. In cases where it is not practical to maintain a 10-foot separation, equivalent protection shall be required **and approved by KDHE**.

When a water pipe and a gravity sanitary sewer cross and there is 2 feet or more of separation (clear space), no special requirements or limitations are provided herein. In cases where it is not practical to maintain a 2-foot separation, equivalent protection shall be required **and approved by KDHE**.

Joints in the sewer pipe shall be located as far as practical from the intersected water main.

b) Pressure Sanitary Sewers. When a water pipe and pressure sanitary sewer are laid parallel to

each other, the same separation rules apply as for gravity pipe.

When a water pipe (including service lines) and a pressure sanitary sewer cross and the pressure sewer is 2 feet or more (clear space) below the water pipe, no special requirements or limitations are provided herein. In cases where it is not practical to maintain a 2-foot separation or the sewer is above, equivalent protection shall be required **and approved by KDHE**.

The remaining subsections under "Separation of Water Mains and Sewers" shall now be:
c) Sewer connections
d) Sewer manholes
e) Storm sewers
f) Drains

10. **Waterline Abandoned in Place.** Section 803.5 "Construction Methods", add the following:
Both ends of all pipes to be abandoned in place shall be plugged with a mechanical joint cap. Pipes abandoned in place having diameters greater than fifteen inches (15") shall be filled with sand or grout and plugged with a mechanical joint cap.

11. **Approved Water Valves**. Section 803.7, "Valves", delete the 3rd paragraph and replace with the following: A list of approved water valves can be found on the City of Wichita website at http://www.wichita.gov/Government/Departments/PWU/Pages/Regulations.aspx.

12. **Water Services.** Section 803.12, "Meter Service Connection", add the following:
Water Service Replacement. The Contractor shall replace all water services that are connected to the water mains being replaced. The Contractor shall be paid for the actual number of services installed at the unit price bid for the appropriate water service bid item. Water service tables shall be included in the project plan set. The tables are to be completed by the project Inspector as services are replaced. The Contractor shall provide all information necessary to complete the tables. All water services found as 1" or smaller shall be replaced using 1" service materials, unless otherwise directed by the plans. The Contractor shall provide all materials for the water service replacement bid item, including: installation of the 1" service saddle, 1" service tubing as necessary, 1" meter setter, meter box, ring, and lid. The same shall apply for relocated services – new 1" meter setter, approved meter adapters, meter box, ring, and lid.

Water Meter Replacement. All existing water meters are to be replaced where water services are replaced or relocated. The new water meter shall be located in the same proximity as the existing water meter, where possible. The new water meters are to be set into the new 1" water meter setters using approved adapters, if needed. The Public Works & Utilities Department will provide the new 1" meters at no cost. **All existing 5/8", 3/4" and 1" water meters shall be replaced with new 1" water meters**. Where an existing meter is found to have an ERT, the meter shall be reinstalled into the new 1" water service and the necessary water meter information shall be provided. The new water meters shall be provided by the Public Works & Utilities Department, at no cost to the Contractor. The new meters may be picked up at the Public Works & Utilities Department Maintenance warehouse at 1825 S. McLean Blvd.

The Contractor shall return the old water meters to the Public Works & Utilities Department Maintenance warehouse within three working days of the meter removal unless otherwise directed by the Public Works & Utilities Department as approved by the Engineer. The Contractor shall be required to pick up new water meters from the Public Works & Utilities Department Maintenance warehouse. No more than 20 water meters may be picked up at one time. To pick up the water meters, the Contractor shall contact the warehouse supervisor at (316) 219-8915, and provide the water project number and project description, and the number of which size meter is required, **24 hours in advance of picking up the new meters.** The warehouse supervisor shall record the Contractor's name, project number, water meter sizes, the meter numbers, and provide lists of the water meter numbers to the Contractor, the project Inspector, and to Public Works & Utilities Department at (316) 268-4555 and other Public Works & Utilities Department staff as necessary. When an existing water meter is found, the meter shall be replaced with a new water meter; the project Inspector shall record the address where the old meter was removed, the old meter number, the old meter reading, the new water meter number, the new water meter

size, the new meter reading, and confirm the address where the new meter is installed. The project Inspector shall provide the information to the project Engineer, and to Systems Planning of the Public Works & Utilities Department

The meter installation information is to be provided within three (3) working days after the new meter is installed. All new water meters picked up from the Public Works & Utilities Department Maintenance warehouse that are not installed, shall be returned to the Public Works & Utilities Department Maintenance warehouse. The meter numbers of the meters returned shall be recorded and a list prepared. Copies of that list shall be provided to the project Inspector, the project Contractor, and to Public Works & Utilities Department. The Contractor shall be charged directly for all new water meters that were picked up but not used or returned to the Public Works & Utilities Department warehouse. The water meter adapters to be used on this project shall be of a brand approved for use by the Wichita Public Works & Utilities Department. The adapters shall be brass, easily installed or removed, and have gaskets that may be easily removed or replaced as necessary. The water Contractor shall deliver all existing meter rings and lids that do not meet current City of Wichita standard specifications or are not in suitable condition, to the Public Works & Utilities Department material yard at 1825 S. McLean Blvd. Picking up and transporting the new water meters, the old water meters, and the meter rings and lids, shall be considered subsidiary to the water service installation bid item and not be bid or paid for separately.

ERT Installation. The Public Works & Utilities Department shall be responsible for providing the ERT with all water meters to be installed. The Contractor is responsible for installing the ERT for each water meter installation. Costs for installing the ERT at each water service installation shall be considered subsidiary to the water service installation bid items and not be bid or paid for separately.

Water Service Abandonment, 1" and Smaller: For all water service abandonments included on plans, the contractor will expose the corporation at the water main and shut it off. Water service tubing will be separated from the corporation and the meter box, ring & lid will be removed from the meter setter. The contractor will provide measurements for the corporation in relation to the center line of the nearest streets. Any services not shown on plans that are discovered during construction will require verification from the City before abandonment.

13. **Blocking.** Section 803.14, "Blocking", add the following:
All waterline pipe 20" and larger shall be restrained joint, where necessary, and thrust blocking will not be allowed. Restrained joint pipe will not be called out in the plans, but shall be required as specified by the pipe manufacturer and/or supplier. In addition to a comprehensive lay schedule, the contractor shall be required to provide complete documentation and certification to the Project Engineer from the Contractor that explicitly states in every case that those sections of pipe to be restrained meet or exceed adequate restraint for the pressure class specified.

14. **Water Line Testing**. Section 803.15, "Testing", delete the "General" and "Pressure Tests" sections and replace with the following. Also delete the "Leakage Test" section.

General:
All sizes of water lines, including fittings and connections shall be pressure tested for watertightness by subjecting each section of line to hydrostatic tests in accordance with applicable provisions of AWWA C-600, except as modified below. The contractor shall provide all equipment, material, and labor to perform the required testing.

Pressure/Leak Tests:
Water lines, including all fittings and connections to the water mains shall be tested for watertightness by subjecting each section to pressure/leak test. The pressure shall be measured at the lowest end of the section under test. The pipe is to be tested at a test pressure of 150 psi. The duration of the test is to be two hours unless otherwise directed by the Engineer. Each section of the project is to be tested separately as per AWWA C-600, or as modified by these specifications. A section of less than 500 feet may be tested with the next adjacent section, however, testing of sections longer than 1/2 mile in total pipe length shall not be allowed unless written approval from the Engineer has been provided.

Pressure/leak testing may begin only after appropriate backfilling has been completed and the last concrete thrust block has set for seven days, unless high early strength concrete was used, in which case the block must set for 36 hours prior to testing. The pipe to be tested shall be filled slowly with water and allowed to stand for 24 hours to allow for absorption. After the 24-hour period, the test may begin. Any exposed valves, fittings, pipe sections, and fire hydrants, etc., shall be examined during the pressure/leak test for cracks, leaks, or other signs of leakage. The pipe section is to be pumped to 150 psi and the pressure gages observed for the duration of the test. The pressure shall not vary more than 5 psi during the testing period with no additional water added. The pipe sections that do not pass testing, shall be repaired or replaced with sound material as directed by the Engineer, at the expense of the Contractor. The test shall be redone after repairs have been made. Only after the section has passed the test shall the section be accepted.

15. **Tracer Wire**. Add Section 803.17 as follows:
803.17 TRACER WIRE
All water line installations shall include a tracer wire and test stations as referenced by the City of Wichita Standard Water Assembly Detail (WL-101).

16. **Ductile Iron Pipe Requirement.** Section 803.3, "Materials", add the following under "General":
e) Ductile Iron Cement Lined (DICL) pipe shall be used any time the length of pipe to be installed is 11' or less. If a change to the project occurs that requires a run of pipe less than or equal to 11' long, or the plans failed to show DICL for the same, the contractor will be compensated for additional cost, if necessary, as agreed to by the Engineer.

17. **Butterfly Valve Orientation.** Section 803.3, "Materials", add the following under section "c" of "Water Valves": Mechanical Joint Butterfly Valves shall be installed such that the operator is adjacent to the closest property line.

18. **Revised 063016 (sm)**
Sanitary Sewer Couplings. Section 804.2, "Materials", add the following: Allowed couplings for sanitary sewer connections are as follows:

PVC to VCP Connections:
- 8" thru 12" pipe connections – non-shear repair couplings will be required.
- Greater than 12" pipe connections – Fernco couplings (concrete encased) are allowed.

Private Laterals, Schedule 40 PVC to VCP Connections:
- 4" & 6" pipe connections - non-shear repair couplings will be required.

PVC to PVC Connections:
- When connecting plastic pipe to plastic pipe, a gasketed plastic coupling of the same material and schedule or SDR as the pipe shall be used, for 8" diameter pipe or larger. For 4" and 6" diameter pipes, the coupling may be gasketed or solvent welded.

Approved Non-Shear Couplings for 4", 6" and 8" pipes:
- **Cascade Couplings**
- **Shear Guard Couplings by Indiana Seal**

The Contractor is to supply and install additional laminated gaskets as may be needed due to variances in outside diameter of existing materials. Cost of additional gaskets shall be subsidiary to the installation of the pipe.

Fernco Coupling Specifications:
Fernco couplings shall be banded with two stainless steel bands on each side of the coupling and each band shall be sealed in position at the junction of the band screw and band thread with a two part epoxy. The coupling shall be encased in concrete.

All Cascade and Fernco style couplings of any style shall be wrapped with 8-mil polyethylene wrap (polywrap) to prevent corrosion. The polywrap shall be continuous, securely taped and provide a continuous barrier between the coupling and surrounding pipe bedding or concrete. All couplings, regardless of the material, shall be bedded with Type I bedding a minimum of 6" on all sides.

19. **Sanitary Sewer Pipe – Ductile Iron.** Section 804.2, Stormwater/Sanitary Pipes, remove part "e", "Ductile Iron Pipe (Sanitary)" from the specifications. Ductile iron pipe is not allowed for sanitary sewer construction on City of Wichita projects.

20. **Corrugated High Density Polyethylene Pipe.** Section 804.2, "Materials", add the following:
Storm Water Pipe:
Corrugated High Density Polyethylene Pipe -

1. Material
Corrugated High Density Polyethylene (HDPE) pipe for storm water shall conform to ASTM F2306 and AASHTO M294, or the latest revisions thereof, and shall be Type S or Type SP (Perforated – only when specified) only. All HDPE pipe joints shall consist of integral bell and spigot with rubber gasket that meets specification requirements of ASTM F477. Bell shall span over three (3) spigot corrugations. All joints shall be soil tight, per ASTM F2306, paragraph 6.6.3.1, and AASHTO M294.

2. Size
HDPE pipe shall have an I.D. equivalent to the pipe size specified by the project plans. **The maximum allowable inside diameter for HDPE pipe shall be thirty (30").**

3. Connections and Fittings
Fittings/connections will only be allowed in repair situations, and as approved by the City's Construction Engineer. No fittings will be allowed between dissimilar materials. Connection to an existing pipe, regardless of the existing pipe material, shall be by means of a structure, to be designed into the project. All fittings to be used for HDPE to HDPE connections shall not reduce or impair the overall integrity or function of the pipeline and shall meet the requirements of AASHTO M294 and ASTM F2306. Fittings may be either molded or fabricated, and shall be soil tight. Common corrugated fittings include in-line joint fittings such as couplers and reducers, and branch assembly fittings such as bends, tees, wyes and end caps. Only fittings supplied or recommended by the manufacturer, and as approved by the Construction Engineer, shall be used. The cost of such fittings, adapters, and connections shall be considered subsidiary to the HDPE pipe bid item, and will not be bid or paid for separately.

4. Allowable Use
HDPE pipe will only be allowed when specified on the plans or in project specific provisions. HDPE pipe placement within the street right-of-way, including under pavement, shall only be permissible for roadways that carry less than 3,000 vehicles per day.

The last run of pipe to an end section, headwall, ditch or other such facility must be concrete. HDPE pipe shall always terminate at a manhole or other type structure, and no exposed pipe will be permitted. The use of HDPE pipe as a road or driveway culvert will only be allowed as approved by the City Engineer's office.

5. Installation
Pipe bedding shall be improved Type 1 or Type 2 per Section 801.2 and 801.5 (Flexible Pipe) of the Standard Specifications, with the following modification. Improved bedding shall be placed a minimum of six inches (6") under the barrel of the pipe to twelve inches (12") above the pipe, or to within two feet (2') of final grade, whichever is higher.
There is to be a minimum of thirty-six inches (36") of cover above the top of pipe, as measured from the top of curb in street right-of-way, and from proposed ground level in side and back lot easements.

The minimum trench width shall be 1-½ times the pipe diameter plus twelve inches (12").

Installation of HDPE pipe shall be by methods approved by the Construction Engineer, and per the manufacturer's recommendation. Methods other than approved shall not be allowed. Any installation of HDPE pipe by methods that are not approved shall be removed and reinstalled at the expense of the Contractor.

6. Testing
The Contractor shall televise and mandrel the HDPE pipe thirty (30) days after construction. Any barrel

deflection of the pipe (reduction of the barrel base inside diameter) greater than 5% will require the reinstallation or replacement of the pipe by the Contractor. Any penetration of the pipe that is encountered during televising will also be reinstalled or replaced by the Contractor, at no additional cost to the project. Repairs will be made per the manufacturer's recommendation and as approved by the Construction Engineer. The cost of all testing shall be considered subsidiary to the HDPE pipe bid item, and will not be bid or paid for separately.

Mandrel testing shall be completed per City of Wichita Standard Specifications. Televising of HDPE pipe shall be per the following.

HDPE Storm Sewer Pipe – Televising Specifications

All HDPE storm sewer pipe being televised by private companies shall conform to the following set of standards:

Videos may be submitted by Compact Disc (CD) or DVD. CD's and DVD's shall be of high quality and clarity.

Videos and written logs shall be clearly labeled with project name, project number and clear reference to the location of storm sewer work.

The camera operator shall provide an audio description to clearly identify the segment being televised. They shall locate the line being televised from the closest north-south street and east-west street. Beginning and Ending structures shall be called out using the stationing and line number references as shown on the construction plans.

Televising will begin at the center of the upstream manhole and will run continuously to the center of the downstream manhole. The center of the upstream manhole shall be set at 0 ft and the video shall show the complete footage of each line. Any breaks or incontinuities in the video recording will result in the video being rejected and a new and complete video will need to be submitted.

Approximately one inch simulated flow shall be added to show flow grade.
Camera shall be pulled in the same direction as the flow, unless approved in writing by the City Engineer's office.

Camera travel must be slow enough that the reviewer can easily have three seconds to view the entire circumference of the pipe before the camera passes by any location.

Contractor shall identify on the video and on the written log, each feature observed. Any specials features shall be identified by station, left or right. The operator shall pause the camera at each feature such that it will be clearly visible on the screen for review, and pan/tilt/rotate the camera head to obtain a clear view of the entire outside perimeter of the pipe.

For any potential defect, such as a gapped joint, the camera shall stop, pan/tilt/rotate and observe the entire defect. This means left, right and top shall be clearly visible for review.

The camera operator will provide an audio description of every feature viewed.

If a cleaner head is pulled ahead of the camera, it shall not be operated unless it is necessary to lower the flow level to view taps, risers and other features. When a cleaner head is used in front of camera it shall be positioned no closer than three feet to the camera. If necessary to pressurize the cleaner nozzle to view a defect or connection while the camera is stationary, the simulated flow level must be re-established prior to the televising continuing after the pressure is removed from nozzle. If the nozzle must be pressurized for a length of pipe where the camera is not stationary, after the nozzle pressure is off, the camera must be

returned to the starting point where the cleaner was pressurized and travel through the same area with simulated flow.

The Project Construction Engineer shall be notified in advance when the televising is to take place (specification requires televising to be completed a minimum of thirty days after completion of the project), and the video and written logs shall be submitted to the Construction Engineer's office within one week of completion.

21. **Manholes/Inlets Manhole Coatings and Joint Wraps.** Section 804.4, "Manholes/Inlets", item "Precast Concrete Manholes Type P",

Replace Section f) with the following:

> All interior surfaces of precast manholes shall receive a troweled or broomed grout finish to fill any voids and irregularities prior to applying epoxy paint. All inside surfaces of the manhole that will be exposed to sewer gases shall be coated with two coats of approved epoxy paint. A list of approved epoxy paints can be found on the City of Wichita website at http://www.wichita.gov/Government/Departments/PWU/Pages/Regulations.aspx.

Add the following sections:

> i) Exterior manhole walls shall be coated with an approved waterproofing membrane system. A list of approved waterproofing membrane systems can be found on the City of Wichita website at http://www.wichita.gov/Government/Departments/PWU/Pages/Regulations.aspx.
>
> j) All manholes with a pipe size greater than or equal to 15" shall have an approved epoxy lining system applied to interior surfaces in lieu of the epoxy paint listed in section (f). A list of approved epoxy lining systems can be found on the City of Wichita website at http://www.wichita.gov/Government/Departments/PWU/Pages/Regulations.aspx.
>
> k) All manhole section joints that will be in groundwater or installed at a depth greater than 12ft shall be wrapped with an approved External Joint Seal. A list of approved External Joint Seals can be found on the City of Wichita website at http://www.wichita.gov/Government/Departments/PWU/Pages/Regulations.aspx.

22. **Sanitary Sewer Testing.** Section 804.5, "Testing", replace the second sentence under "Pipeline Testing and Inspection", regarding sanitary sewer air testing, with the following:

> All sanitary sewers constructed, regardless of size or pipe type, will be air tested by the contractor, per the specifications in this section. If a bid item is not included for testing, all costs associated with air testing shall be considered SUBSIDIARY to other items of work.
>
> Also replace the entire fifth paragraph, regarding deflection testing, with the following:
> Unless otherwise directed by the plans or Project Specific Special Provisions, all flexible and semi-rigid pipe shall be tested for deflection after installation and backfill. Deflection may be tested by a mandrel or by direct measurement of the vertical diameter of the pipe. Pipe that has deflected more than five percent (5%) of its nominal dimension shall be reconstructed, repaired or reconstructed by the Contractor at his expense. The reconstructed pipe shall also be tested for deflection. All deflection testing shall be completed by the contractor, including necessary equipment and labor, regardless of the number of tests required to achieve acceptance. All new sanitary sewer pipe will be televised by the City one time. If corrections/repairs are necessary for any reason, re-televising will be the responsibility of the contractor.

23. **Added 061215 (sd)**
Sediment Removal for Storm Water Treatment Devices. Add to Section 804.6 as follows:

Storm Water Treatment Device Sediment Removal
Upon completion of all permanent seeding and sod placement, the Contractor shall remove all sediment and trash from any Storm Water Treatment Devices installed on the project. Final Acceptance of the project will not be given until the Contractor completes the required cleaning. All sediment and trash removed shall be disposed of properly in accordance with all City, State, and Federal regulations.

24. **Pressure Sanitary Sewer.** Add Section 804.7 as follows:
804.7 PRESSURE SANITARY SEWER
Locating and Testing
a) **Tracer Wire/Signage.** All pressure sanitary sewer installation shall include tracer wire and signage as shown on the City of Wichita Standard Detail (SS-106).

b) **Testing.** All pressure sanitary sewer shall be tested similar to waterlines per section 803.15

25. **Form High Modulus PVC Liner Pipe.** Delete Section 806. Folded and expanded PVC pipe is not allowed.

26. **Pipe Lubrication.** Section 808.3, "Pipe Lubrication System", add the following: All pipe lubrication shall be required to be a non-toxic lubricant.

PART 900

1. **Landscape Specifications.** Part 900 has been revised and is available at QuikPrint (217 Pennsylvania (316) 942-2208) or online at http://www.wichita.gov/Government/Departments/PWU/Pages/Regulations.aspx (November, 2011). The Contractor shall take special note of the revised "Maintenance/Acceptance" and "Payment" specifications for seeding and sodding.

2. **Turf Restoration/Temporary Erosion Control.** Section 901, "General", replace the second and third paragraph with the following, to reflect a change in payment of temporary erosion control blanket:

> All areas disturbed by construction that are adjacent to developed properties shall be restored with sod to match the existing turf type, as shown on the plans. A property shall generally be considered developed if occupied by a residential or commercial structure, parking lot, or other facility used on a regular basis. Restoration of disturbed areas shall include, but not be limited to, top soil preparation, fertilizer and sod installation. All sodding work shall be in accordance with the specifications in this section and City of Wichita Administrative Regulation 6.5 or the current version. The regulation governs cleanup and restoration or replacement following construction. The plans shall indicate the estimated square yards of disturbed area to be sodded, within the projected construction limits for the project. The contractor shall be responsible for restoring all areas **disturbed** by construction, including those outside construction limits shown on the plans. When the weather/season prevents the installation of sod the Contractor shall be responsible for installing approved erosion control blanket at the back of curb (8' minimum width) where all drainage goes to the street; and through full ditch/swale/slope sections where drainage goes elsewhere. The temporary erosion control blanket is to be removed before the sod is placed. All costs for installation of temporary erosion control blanket shall be paid for through the final measured bid item for the same. All costs for sod installation, including removal of the temporary erosion control blanket, shall be considered subsidiary to the bid item "Sodding", or equivalent. In the absence of a bid item for sod installation, all associated work shall be considered subsidiary to other bid items.
>
> All areas disturbed by construction that are adjacent to non-developed properties shall be restored by seeding with a mixture of Ryegrass (applied at a rate of 50 lbs per acre) and Buffalo grass

(applied at a rate of 200 lbs per acre). A property shall be considered non-developed if vacant land and/or is used primarily for agricultural purposes. Restoration of disturbed areas shall include, but not be limited to, topsoil preparation, fertilizer, and seeding. All seeding work shall be in accordance with the specifications in this section and City of Wichita Administrative Regulation 6.5 or current version. The regulation governs cleanup and restoration or replacement following construction. The plans shall indicate the estimated square yards of disturbed area to be seeded, within the projected construction limits for the project. The contractor shall be responsible for restoring all areas **disturbed** by construction, including those outside construction limits shown on the plans. When the weather/season prevents the placement of seed the Contractor shall be responsible for installing approved erosion control blanket at the back of curb (8' minimum width) where all drainage goes to the street; and through full ditch/swale/slope sections where drainage goes elsewhere. The temporary erosion control blanket is to be removed before the permanent seed is planted. All costs for installation of temporary erosion control blanket shall be paid for through the final measured bid item for the same. The Contractor shall be responsible for installing approved permanent erosion control blanket over all seeded areas. All costs associated with permanent seeding and permanent erosion blanket, including removal of the temporary erosion control blanket, shall be considered subsidiary to the bid item "Seeding", or equivalent. In the absence of a bid item for seeding, all associated work shall be considered subsidiary to other bid items.

3. **Erosion Control Blanket for Permanent Seeding.** Replace Section 902.7, "Erosion Control Blanket", with the following:
When permanent seeding is specified but weather or seasonal limitations prevent the planting of the permanent seed, an approved erosion control blanket shall be installed at the back of curb (8' minimum width) where all drainage goes to the street; and through full ditch/swale/slope sections where drainage goes elsewhere. The temporary erosion control blanket is to be removed before the permanent seed is planted. All costs for installation of temporary erosion control blanket shall be paid for through the final measured bid item for the same.

   When permanent seeding is specified, an approved control blanket shall be installed over the entire seeded area, unless otherwise indicated in the plans or provisions. All costs for the erosion control blanket shall be subsidiary to the bid item "Seeding", or equivalent.

4. **Erosion Control Blanket for Temporary Seeding.** Section 902.8, "Temporary Seeding", replace the last paragraph with the following:
When temporary seeding is placed, an approved erosion control blanket shall be installed at the back of curb (8' minimum width) where all drainage goes to the street; and through full ditch/swale/slope sections where drainage goes elsewhere. The erosion control blanket is to be removed before the permanent seed is placed. All costs for installation of temporary erosion control blanket shall be paid for through the final measured bid item for the same.

5. **Erosion Control Blanket for Sodding.** Section 903.6, "Erosion Control Blanket", replace with the following:
When sodding is specified but weather or seasonal limitations prevent installation of the same, an approved erosion control blanket shall be installed at the back of curb (8' minimum width) where all drainage goes to the street; and through full ditch/swale/slope sections where drainage goes elsewhere. The temporary erosion control blanket is to be removed before the sod is installed. All costs for installation of temporary erosion control blanket shall be paid for through the final measured bid item for the same.

Appendix 1

1. **Appendix 1 - "Water Main Disinfection Procedures"**
Delete Appendix 1 and replace with Appendix D from the KDHE minimum design standards.

COMMERCE RAILYARD PARKING LOT PROJECT
SPECIAL PROJECT PROVISIONS
ARTIST SUPPLEMENTAL CONDITIONS

It is the intent of these Specifications to outline the duties and requirements to be followed by the Prime Contractor (Contractor) and his / her subsequent Subcontractors to procure, deliver, install, assist with installation, coordinate, and all other incidentals such that the Artistic Elements (Art Work) are complete and in place as part of the Project.

The Contractor for this Project shall be required to issue and enter into a sub-contract with the Designated Artist for the fees listed herein. This sub-contract shall list the Designated Artist (Artist) as a sole source subcontractor for his portion of the Artistic Features (Art Work). Artist will be responsible for any and all coordination, fabrication, and delivery of his Art Work. If Artist requires any sub-contractors for the fabrication, production and delivery of any Art Work, it shall be his sole responsibility to contract and coordinate these services, unless noted specifically as Contractor service in these plans.

The designated Artist Consultant for this Project is:

Kent Williams - KWED
kent.t.williams@gmail.com
(323) 251-5784

This work shall be in addition to the Special Project Bid Items related to the Artistic Elements that include, but are not limited to: foundations, walls, hardware, frame fabrications, installation procedures, procurement, storage and etc.

Kent Williams is the Artist Consultant for the Project and shall be responsible for coordination and installation of all Artistic Elements. Contractor to coordinate with Mr. Williams to ensure correct ordering of Artistic Elements.

The Artistic Elements are to be installed, assembled, and / or crafted at various locations and times within the Project. Below are the general locations, Artistic Element nomenclature, and the designated Contractor and Artist responsibilities for each area:

I. <u>Stage and Stage Area</u>

Rail-Grass Sculpture-Set A (5 units)
Concrete Seating
Shade Structure
Metal Handrails
Wooden Steps
Tree Grate
Electrical Systems
Lighting Elements

Bronze Elements
Roadway Joint System and Special Coating
Landscaping

Contractor and Artist Responsibilities for Stage and Stage Area:

Contractor shall be responsible for coordination of *Artistic Elements* with *Artist*.

Contractor shall be responsible for all concrete work necessary for *Stage Area*. *Contractor* shall coordinate and verify locations of foundations necessary for *Rail-Grass Sculpture-Set A*. (see Structural Plans)

Contractor shall construct *Stage Area* and *Rail-Grass* Footings first, then installing *Concrete Seating* area after *Artist* has installed *Rail-Grass Sculpture-A* on footings.
Artist shall be responsible for fabrication and installation of *Rail-Grass Sculpture-Set A.*

Contractor shall coordinate and verify locations of foundations necessary for *Shade Structure.*
Artist shall be responsible for fabrication and installation of *Shade Structure.*

Contractor shall coordinate and verify locations of *Wooden Steps* for *Stage*. *Artist* shall be responsible for fabrication and installation of *Wooden Steps*.

Contractor shall coordinate and verify locations of *Metal Handrails* at handicap ramp and *Wooden Steps*. *Artist* shall be responsible for fabrication and installation of *Metal Handrails* necessary for handicap ramp and *Wooden Steps*.

Contractor shall coordinate and verify locations of *Tree Grate*. Contractor shall provide and install the reinforced framework necessary for installation of *Tree Grate*. *Artist* shall be responsible for fabrication and installation of *Tree Grate top plate*.

Contractor shall be responsible for all *Electrical Systems* for *Stage* and *Lighting Elements* and final electrical connection necessary for *Lighting Elements*. *Artist* shall be responsible for fabrication and installation of *Lighting Elements* at *Stage* (Item A-see Electrical Floor Plan A) and at *Shade Structure* (Item B-see Electrical Floor Plan A). *Contractor* shall be responsible for installation of *Lighting Elements* on *Rail-Grass Sculpture-A* (Item C-see Electrical Floor Plan A).

Artist shall be responsible for fabrication and installation of *Bronze Elements* to *Stage*.

Contractor shall install Joint System in concrete road surface west of *Stage* per plan drawings.
Artist shall provide and install *Special Coating* on concrete road surface west of *Stage*.

Contractor shall be responsible for all *Landscaping* required within the *Stage Area.*

Contractor shall provide access, staging and on-site storage as required to *Artist and his sub-contractors* for *Artworks* installation at *Stage and Stage Area*.

II. <u>Rail-Grass Plaza</u>

Rail-Grass Sculpture-Set B (15 units)
Concrete Footings
Electrical Systems
Lighting Elements

Contractor and Artist Responsibilities for Rail-Grass Plaza:

Contractor shall be responsible for coordination of *Artistic Elements* with *Artist*.

Contractor shall be responsible for all concrete work necessary in *Rail-Grass Plaza.*

Contractor shall coordinate and verify locations of foundations necessary for *Rail-Grass Plaza. Contractor* shall construct foundation first, then installing final concrete surface after *Artist* has installed *Rail-Grass Sculpture-Set B* on footings within *Rail-Grass Plaza. Artist* shall be responsible for fabrication and installation of *Rail-Grass Sculpture-Set B.*

Contractor shall be responsible for *Electrical Systems* in *Rail-Grass Plaza* and installation of all *Lighting Elements* within *Rail-Grass Sculpture-Set B.* (see Electrical Plans)

Contractor shall provide access, staging and on-site storage as required to *Artist and his sub-contractors* for *Artworks* installation at *Rail-Grass Plaza.*

III. <u>Seating Areas (two) and Site</u>

Tree Grates (two)
Benches (two)
Bike Racks (two)
Landscaping

Contractor and Artist Responsibilities for Seating Areas and Site:

Contractor shall be responsible for coordination of *Artistic Elements* with *Artist*.

Contractor shall coordinate and verify locations of *Tree Grates. Contractor* shall provide and install the reinforced framework necessary for installation of *Tree Grates*. *Artist* shall be responsible for fabrication and installation of *Tree Grates' top plates*.

Artist shall be responsible for fabrication and installation of *Benches (two locations)*.

Artist shall be responsible for fabrication and installation of *Bike Racks (two locations).*

Contractor shall be responsible for all *Landscaping* required within *project area*.

Contractor shall provide access, staging and on-site storage as required to *Artist and his sub-contractors* for *Artworks* installation at *Seating Areas and Site.*

Designated Artist Fee and Payments

The Prime Contractor shall issue and enter into a subcontract with Mr. Williams in the total amount of **$279,300**. This amount shall include all costs incurred by Mr. Williams for Artistic Elements provided, labor and materials comprising same, in overseeing installation, supervision, review, and coordination.

30% Payment shall be made to Kent Williams - KWED upon receipt of payment to Prime Contractor by City of Wichita. This payment will allow Mr. Williams to order materials and make down payments to his sub-contractors for Artistic Elements.
40% Payment shall be made to same upon fabrication and delivery of *Rail-Grass Elements* and *Stage Shade Structure*.
20% Payment shall be made to same upon installation of all *Artistic Elements.*
10% Payment shall be made to same upon acceptance of all *Artistic Elements* by the City of Wichita.

Commerce Street Railyard Parking

Stage and Train-Viewing Platform

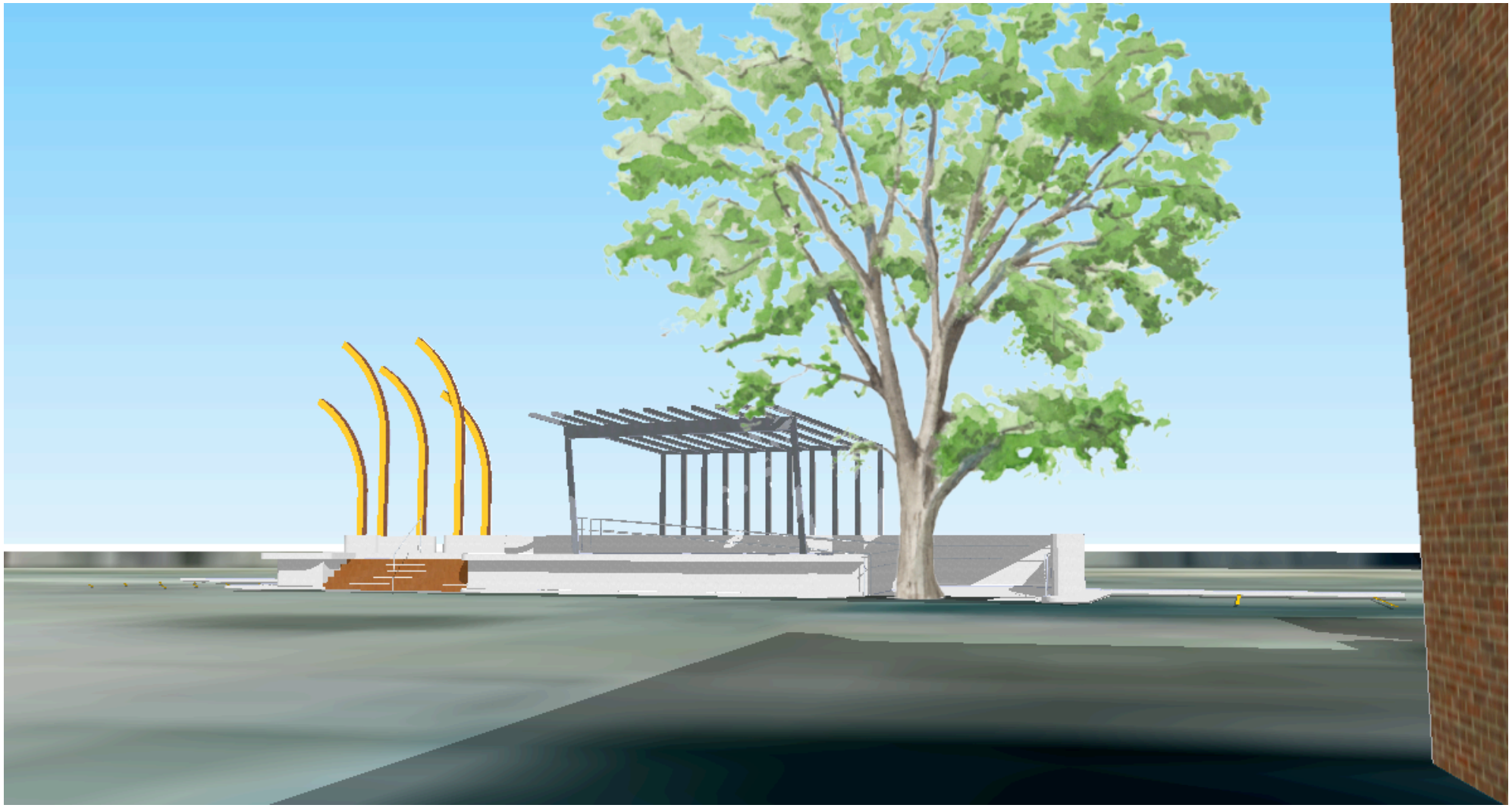

Schematic View

21 August 2016

Commerce Street Railyard Parking

Stage and Train-Viewing Platform

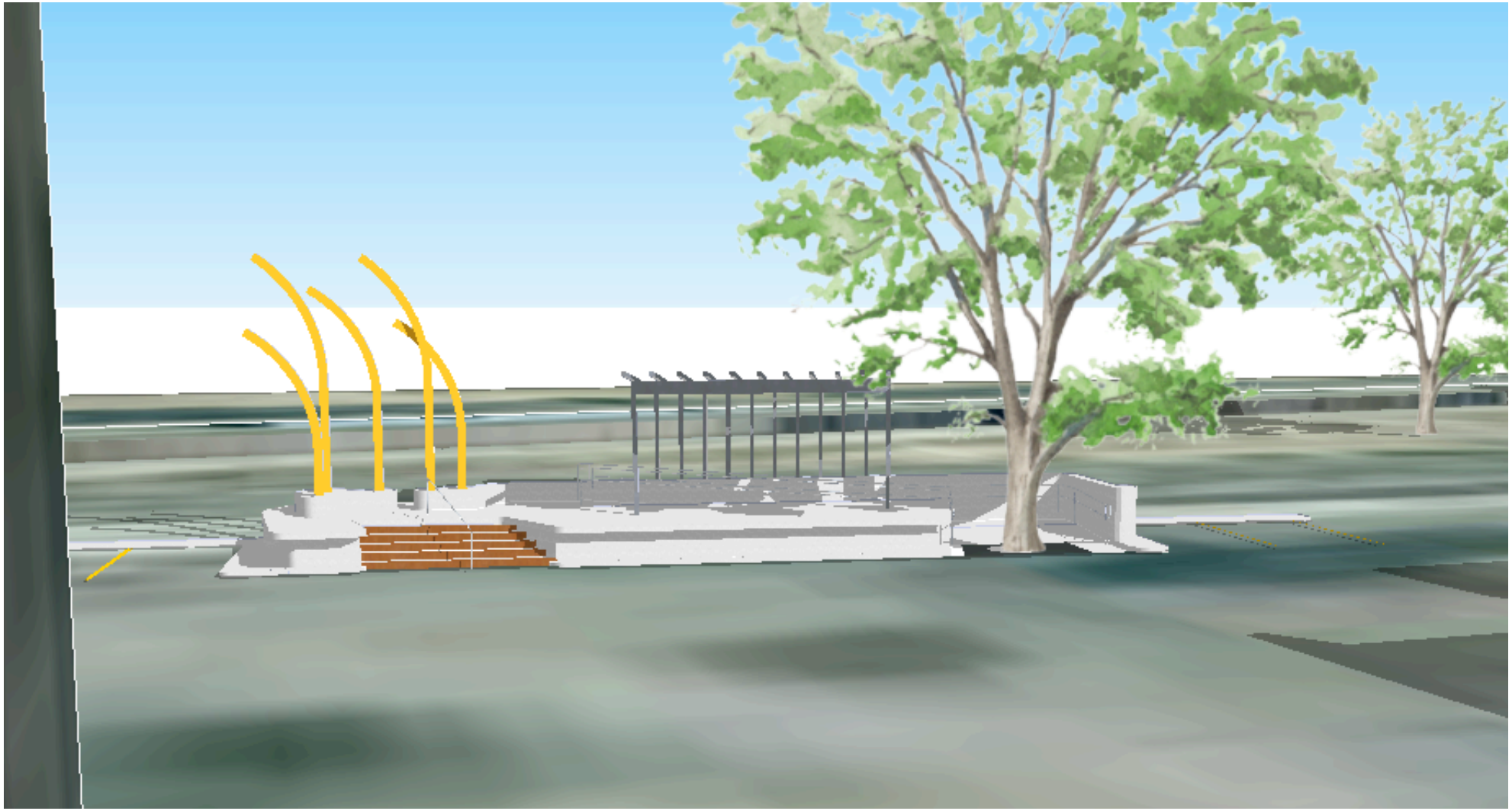

Schematic View

21 August 2016

Commerce Street Railyard Parking

Stage and Train-Viewing Platform

kwed

Schematic View

21 August 2016

Commerce Street Railyard Parking

Stage and Train-Viewing Platform

Schematic View

21 August 2016

Commerce Street Railyard Parking

Stage and Train-Viewing Platform

Schematic View

21 August 2016

Commerce Street Railyard Parking

Stage and Train-Viewing Platform

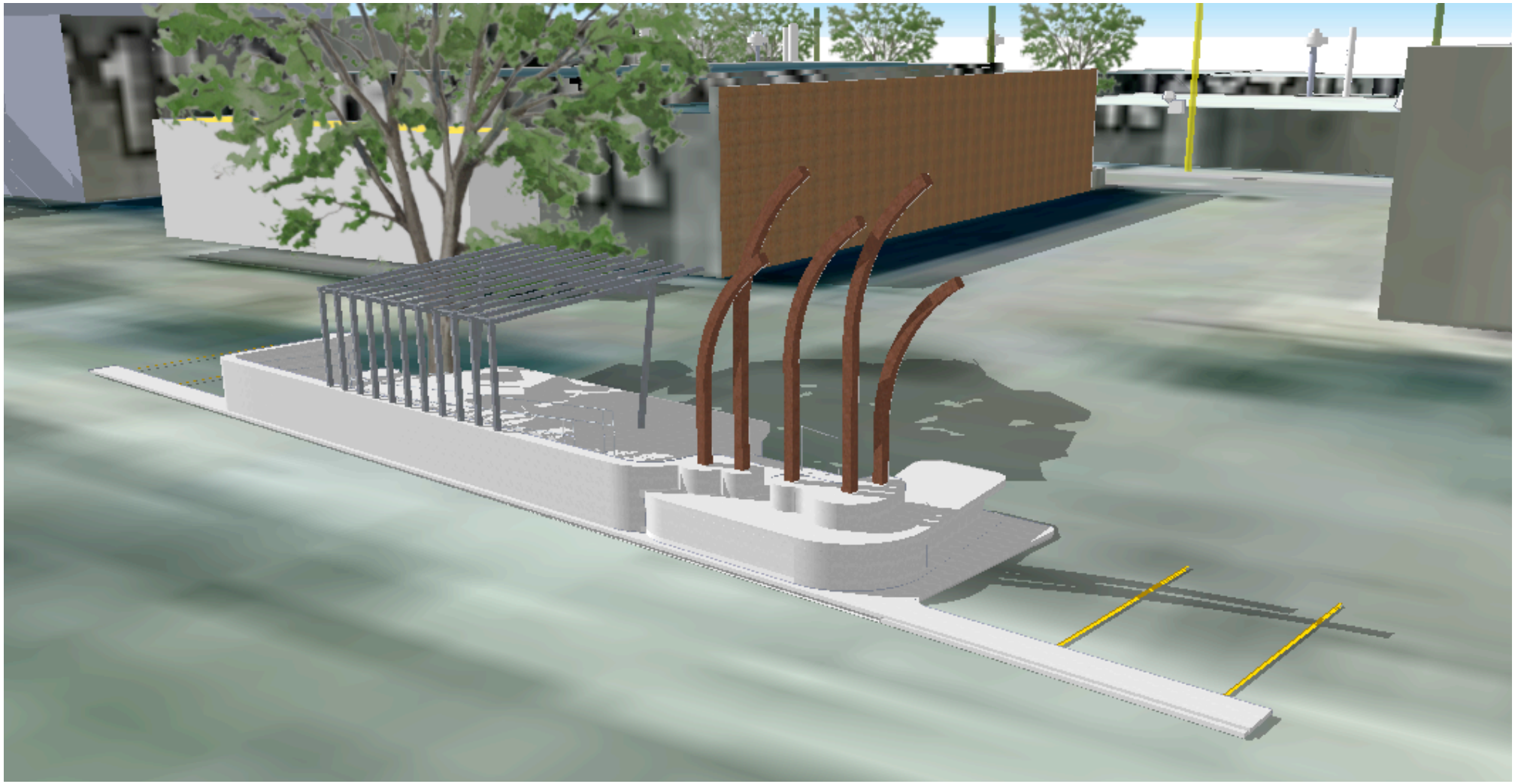

Schematic View

21 August 2016

Commerce Street Railyard Parking

Stage and Train-Viewing Platform

Schematic View

21 August 2016

Railgrass - Exploration

Commerce Street Railyard Parking

Stage and Train-Viewing Platform

Rail Grass Sculpture, et al

kwed

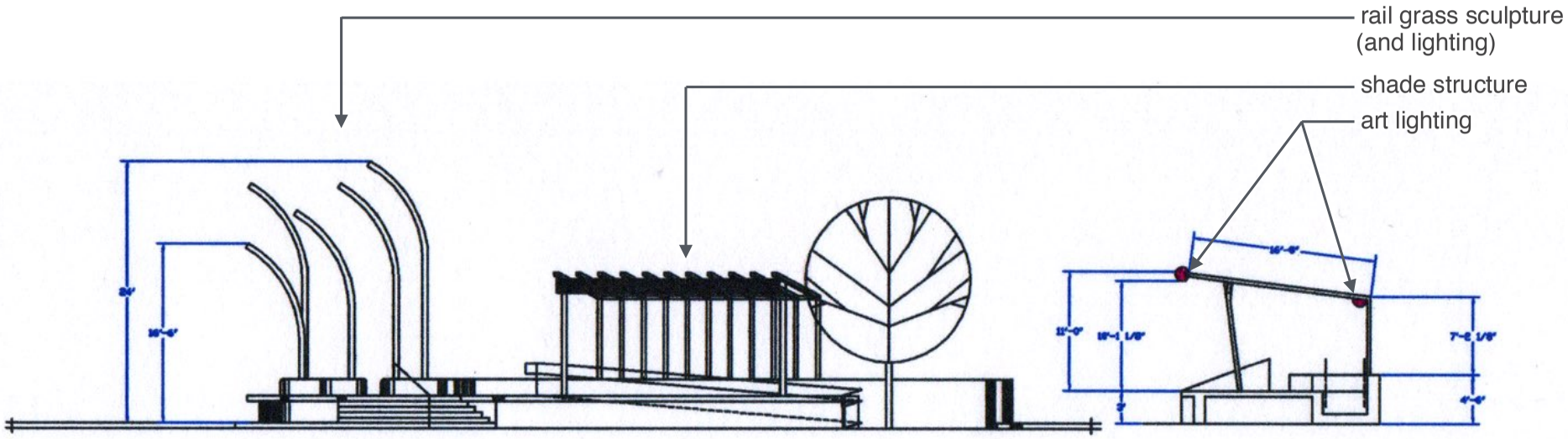

ELEVATION

SECTION

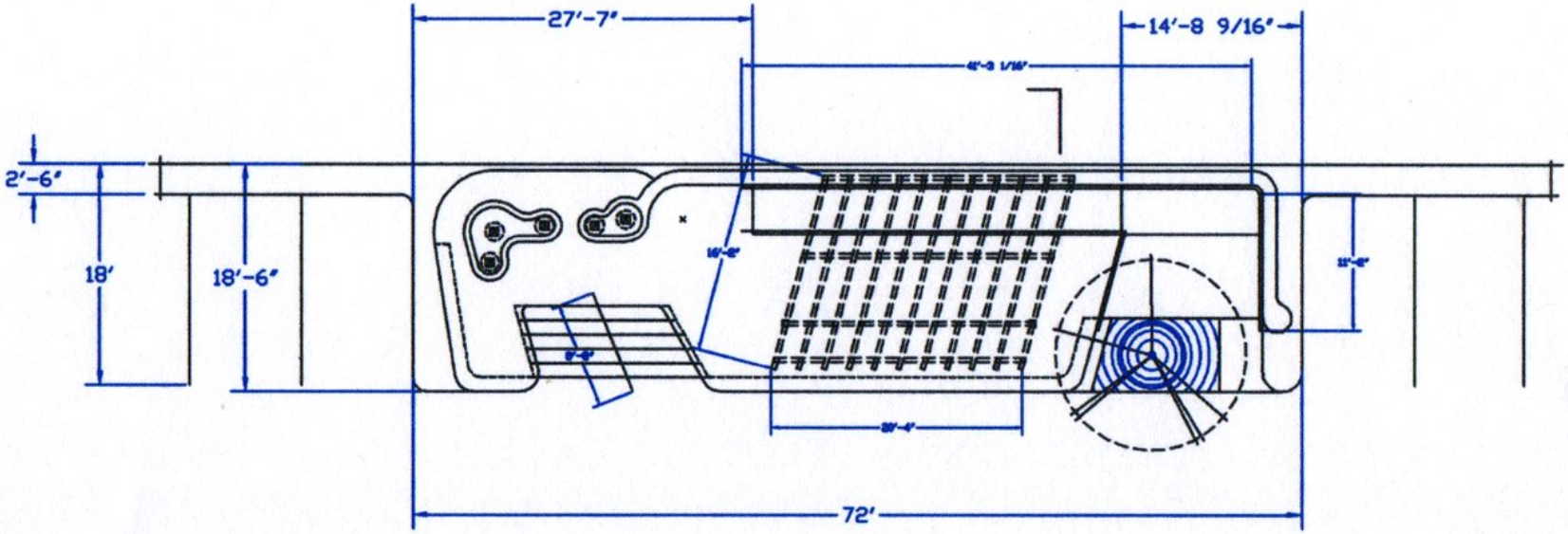

PLAN

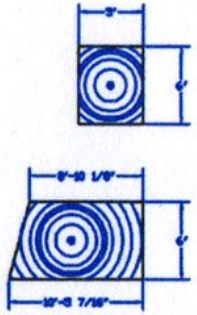

GRATES